TECO	OUTLINE DIMENSIONS	MOTOR TYPE: AEUH8P-XXX
DATE	3-PHASE INDUCTION MOTOR	FRAME NO. 405TC

Pole	HP	kW	Hz	VOLT	r/min
6	75	55.95	60	230/460	1200

Ins	Rating	Dimension in	Approx Weight	Bearings
F	CONT.	inches		DE: 6317 NDE: 6313

Totally Enclosed Fan-Cooled Vertical Type. Squirrel-cage Rotor.

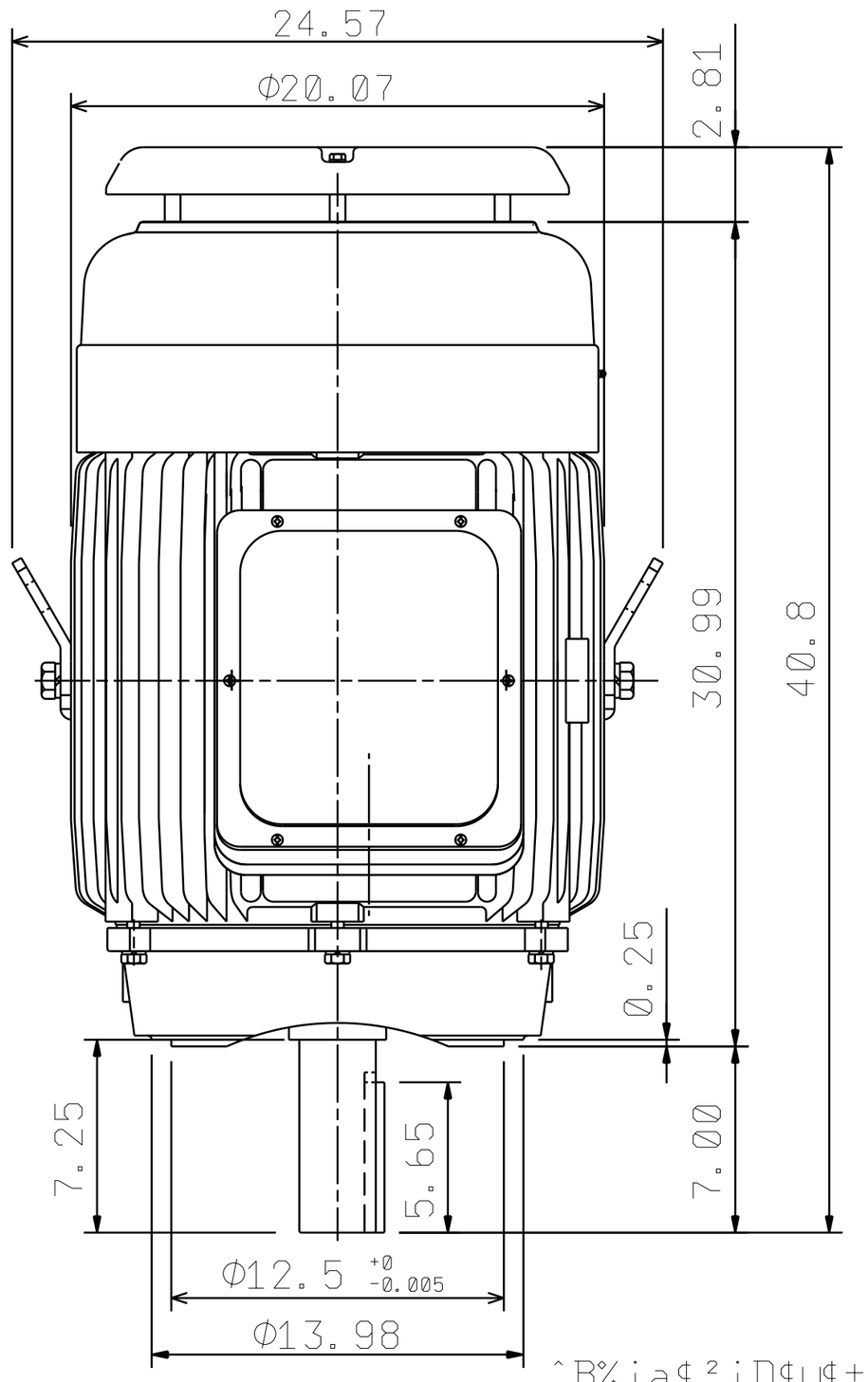

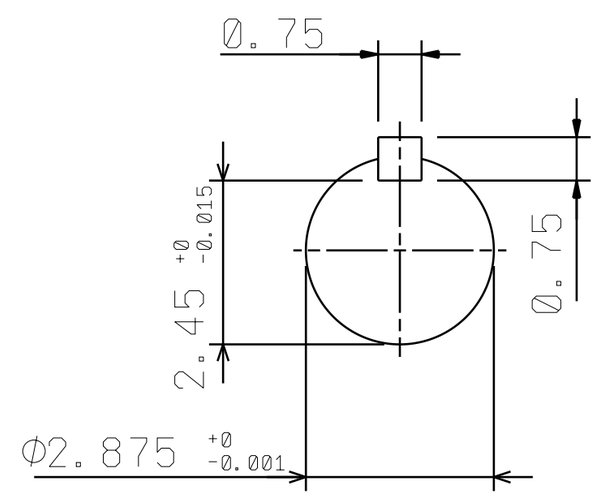

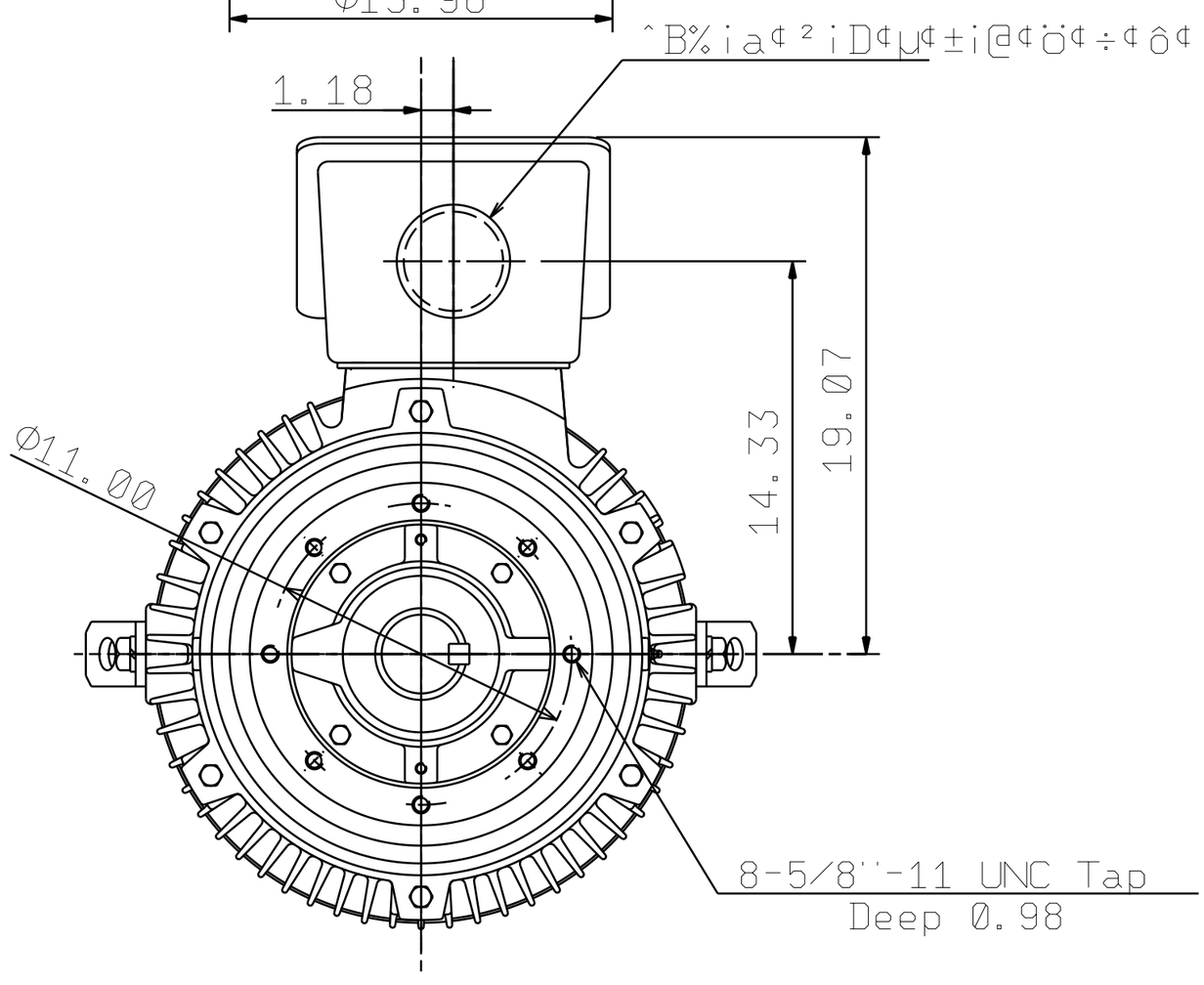

TA17142-00-01

DWG.			東元電機股份有限公司 TECO Electric & Machinery Co., Ltd. TAIWAN
CHKD.			
APPD.			

DWG NO. 31057A694200