CATALOG #	TYPE	FRAME	OUTPUT HP	OUTPUT kW	POLE	SYN. SPEED R.P.M.	VOLTAGE V.	Hz.	TIME RATING	INSULATION CLASS	SERVICE FACTOR	BEARINGS DE	BEARINGS NDE	WEIGHT LBS
PG2002	AMHG	449TS	200	149.1	2	3600	2300/4160	60	CONT.	F	1.15	6315C3	6315C3	1900

WEATHER PROTECTED TYPE I. SQUIRREL CAGE ROTOR

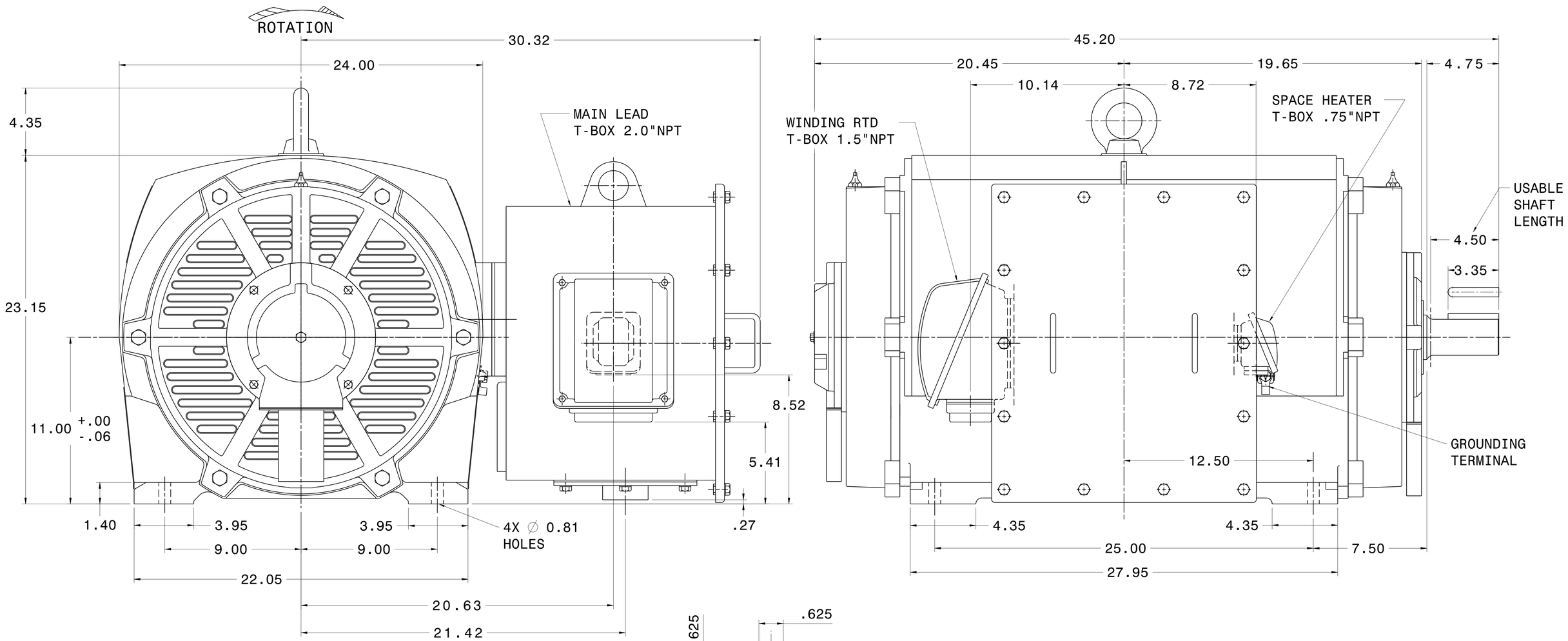

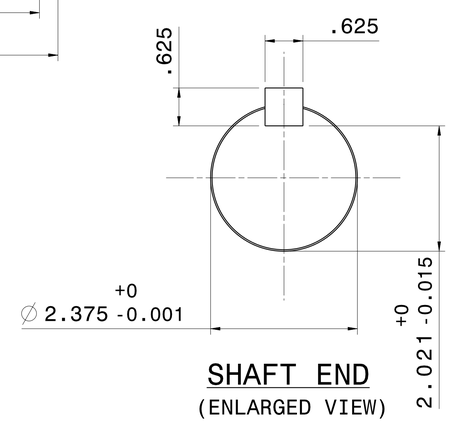

SHAFT END
(ENLARGED VIEW)

NOTES:

1. DIMENSIONS IN INCH.
2. ENCLOSURE: IP23.
3. FOR DIRECT FLEXIBLE COUPLING.
4. SPACE HEATER RATED 120 VOLT, SINGLE PHASE.
5. 100 OHM PLATINUM WINDING RTD'S, 2 PER PHASE.

REV. DATA

REF: 4B040M465

TECO Westinghouse

REV NO 01

3-PHASE INDUCTION MOTOR OUTLINE DIMENSIONS

DWG NO. PG2002

DWN K. MILNER 080317 APPD T. FELPS 080317

TECO-WESTINGHOUSE MOTOR COMPANY ROUND ROCK, TEXAS USA

APPR REV A