CATALOG #	TYPE	FRAME	OUTPUT HP	OUTPUT kW	POLE	SYN. SPEED R.P.M.	VOLTAGE V.	Hz.	TIME RATING	INSULATION CLASS	SERVICE FACTOR	BEARINGS DE	BEARINGS NDE	WEIGHT LBS
PG8002	AMHG	5011A	800	596.5	2	3600	2300/4160	60	CONT.	F	1.15	6315C3	6315C3	4400

WEATHER PROTECTED TYPE I. SQUIRREL CAGE ROTOR

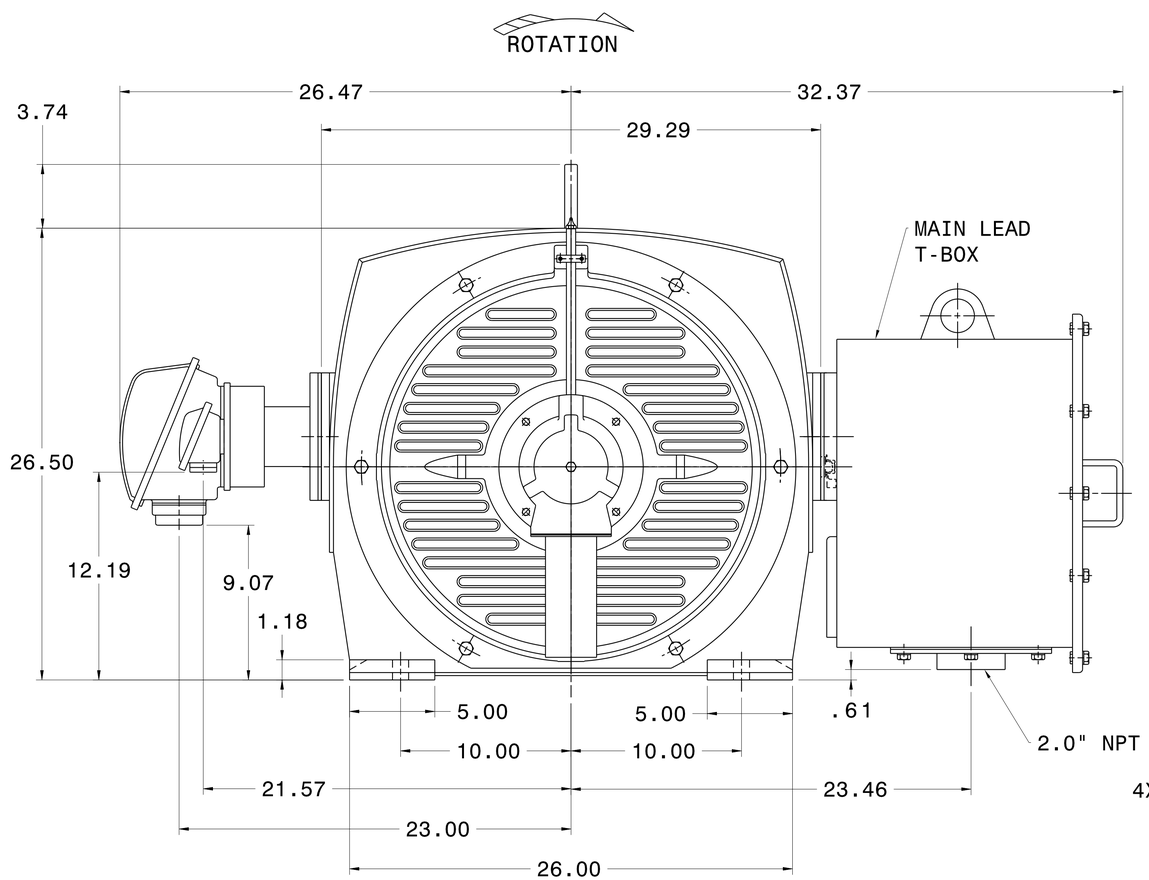

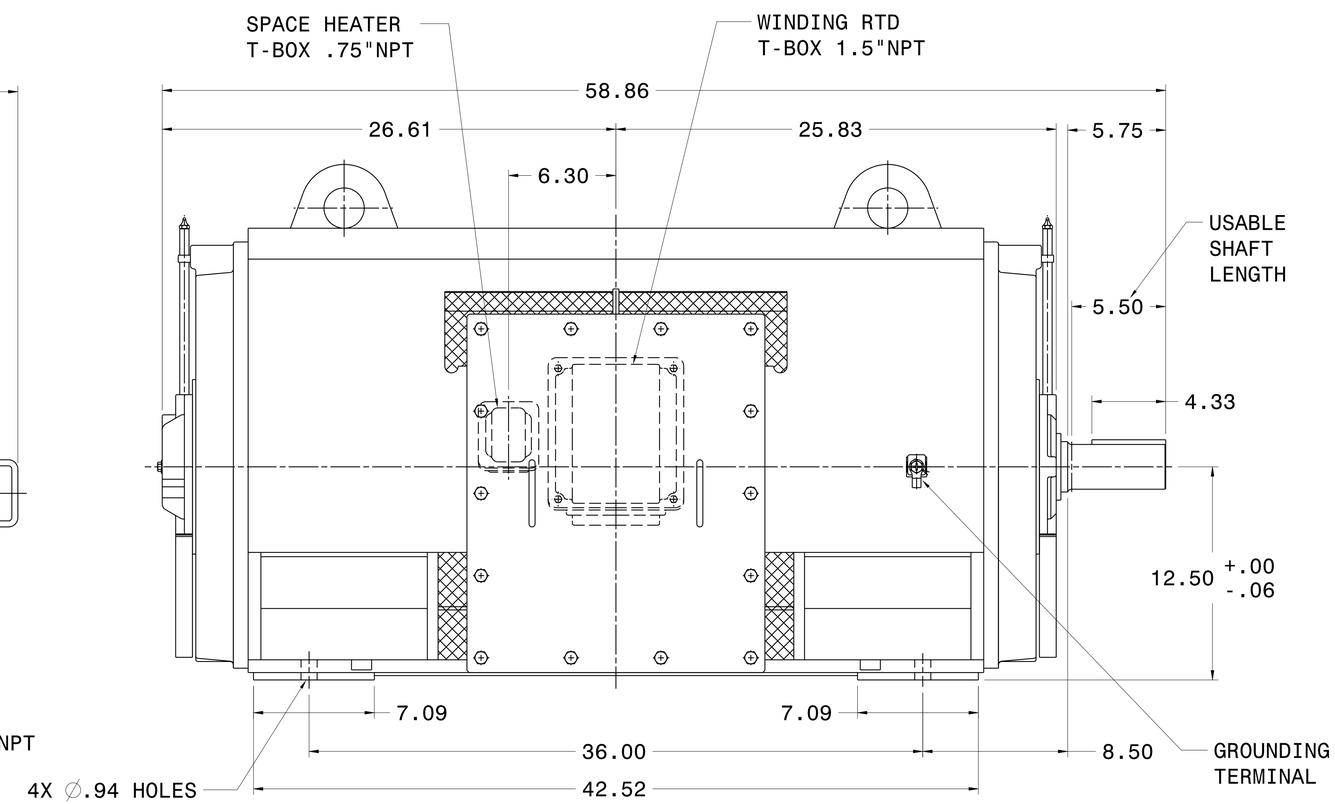

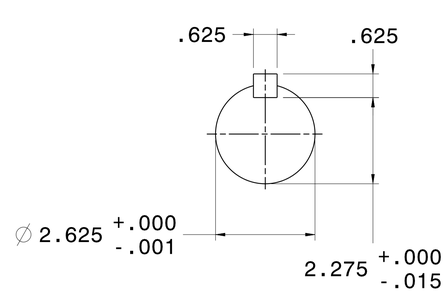

NOTES:

1. DIMENSIONS IN INCH.
2. ENCLOSURE: IP23.
3. FOR DIRECT FLEXIBLE COUPLING.
4. SPACE HEATER RATED 120 VOLT, SINGLE PHASE.
5. 100 OHM PLATINUM WINDING RTD'S, 2 PER PHASE.
6. PROVISION FOR BEARING RTD MOUNTING:
   2X .50" NPT PER BRACKET.

REV. DATA

REF: 4B040L321

TECO Westinghouse

REV NO 01

3-PHASE INDUCTION MOTOR OUTLINE DIMENSIONS

DWG NO. PG8002

DWN K. MILNER 062017 APPD T. FELPS 062117

TECO-WESTINGHOUSE MOTOR COMPANY ROUND ROCK, TEXAS USA

APPR REV A