CATALOG #	TYPE	FRAME	OUTPUT HP	OUTPUT kW	POLE	SYN. SPEED R.P.M.	VOLTAGE V.	Hz.	TIME RATING	INSULATION CLASS	SERVICE FACTOR	BEARINGS DE	BEARINGS NDE	WEIGHT LBS
SPTO/24	BEGS39	48	1/4	.18	4	1800	115/208-230	60	CONT.	F	1.15	6203ZZ	6202ZZ	24

TOTALLY ENCLOSED FAN COOLED, SQUIRREL CAGE ROTOR

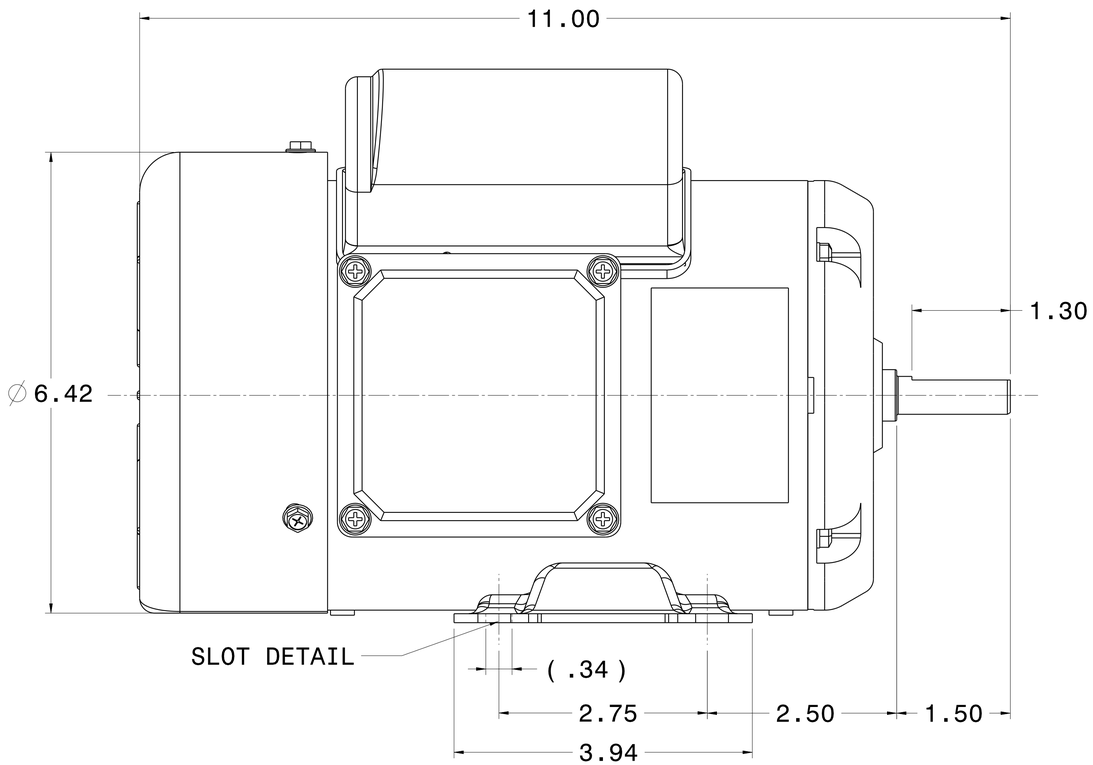

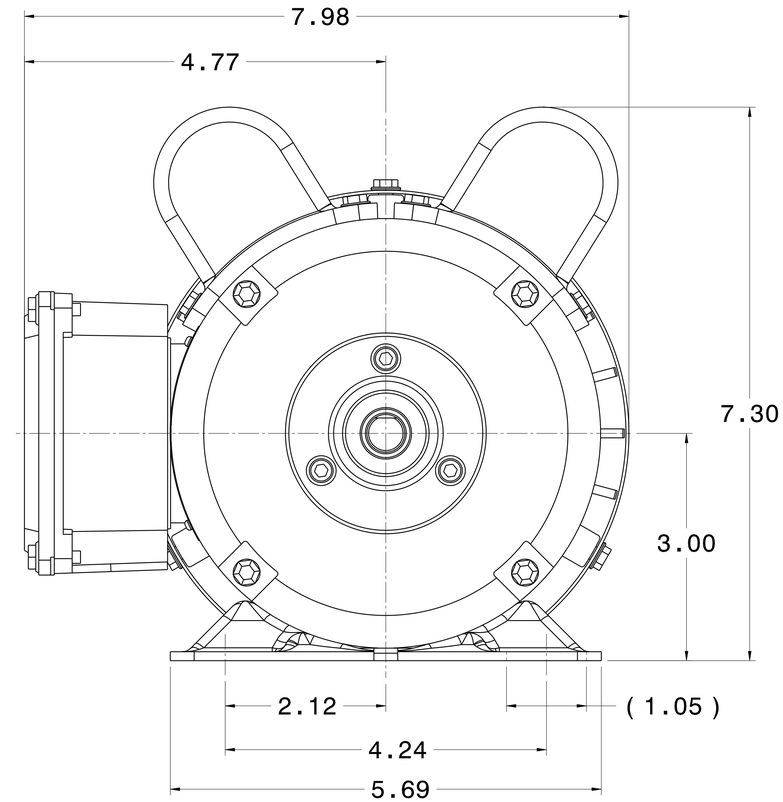

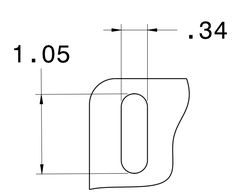

SLOT DETAIL
4X

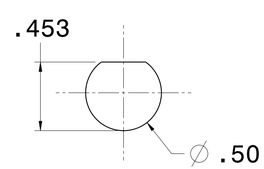

SHAFT END
(ENLARGED VIEW)

NOTES:

1. DIMENSIONS IN INCH.
2. ENCLOSURE: IP44.
3. FOR BELT SERVICE OR DIRECT COUPLING SERVICE.
4. BI-DIRECTIONAL ROTATION.

REV. DATA

REF: 39O4R250KF10A

TECO Westinghouse

REV NO 01

HVAC SINGLE PHASE OUTLINE DIMENSIONS

DWG NO. SPTO/24

DWN K. MILNER 081617 APPD T. FELPS 081617

TECO-WESTINGHOUSE MOTOR COMPANY ROUND ROCK, TEXAS USA

APPR REV A