| TYPE | OUTPUT | | POLE | TIME RATING | VOLTAGE V | Hz | SYN.SPEED R.P.M |
|---|---|---|---|---|---|---|---|
| | HP. | kW. | | | | | |
| AEHCNH | 400 | 298 | 8 | CONT | 2300/4000 | 60 | 900 |

TOTALLY ENCLOSED FAN-COOLED VERTICAL HOLLOW SHAFT TYPE, SQUIRREL CAGE ROTOR

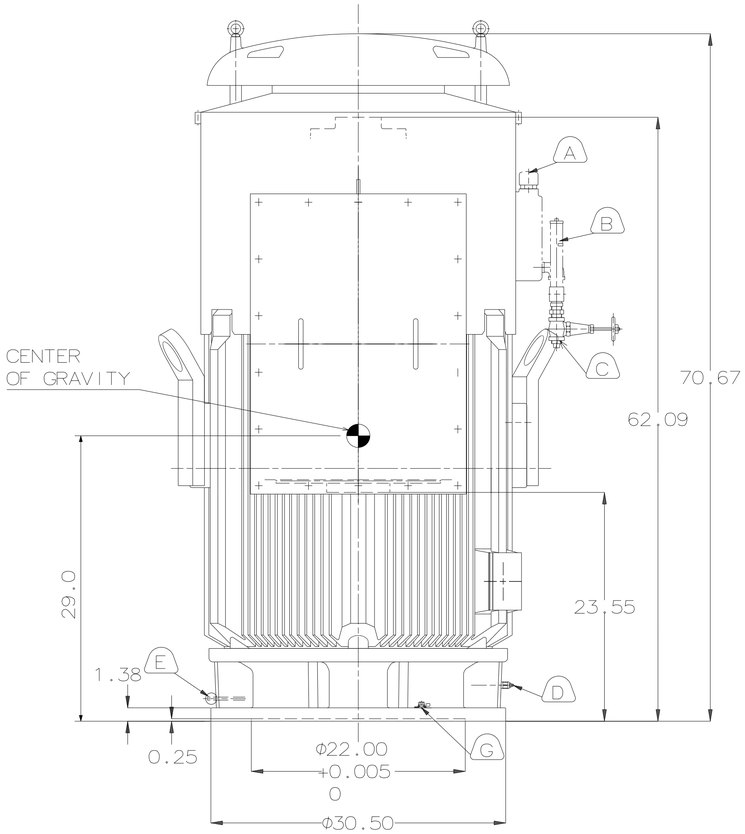


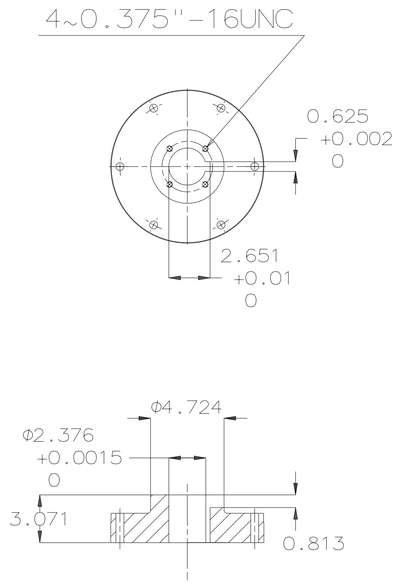


COUPLING
[ENLARGED VIEW]

NOTE:
1. DIMENSIONS IN INCH
2. FRAME NO.5808
3. F CLASS INSULATION, S.F.: 1.15
4. FOR DIRECT COUPLING.
5. BEARING SIZE:
   UPPER BEARING: 29330+6028 [INSULATED]
   LOWER BEARING: 6320C3 [UNINSULATED]
6. UPPER BEARING IS INSULATED. ANY METAL CONNECTIONS TO IT MUST BE INSULATED.
7. LUBRICATION:
   UPPER BEARING USE OIL.
   OIL VISCOSITY: ISO VG68 [300SSU AT 100 °F]
   OIL QUANTITY: 6.3 GAL.
   LOWER BEARING USE GREASE.[MOBIL POLYREX EM]
8. ROTATION: COUNTER-CLOCKWISE[VIEW FROM TOP].
9. WITH NON-REVERSE RATCHET MECHANISM.
10. WITH GIB KEY:0.625X0.625X3.07,1PCS
11. APPROXIMATE WEIGHT: 6290
12. DOWNTHRUST: 22,300 LBS
    (L10-8800HRS)
13. REED FREQUENCY: 43 HZ
14. SPACE HEATER RATED AT 120 VOLT, SINGLE PHASE, 218 WATTS, LEADS TERMINATE IN MAIN LEAD BOX.

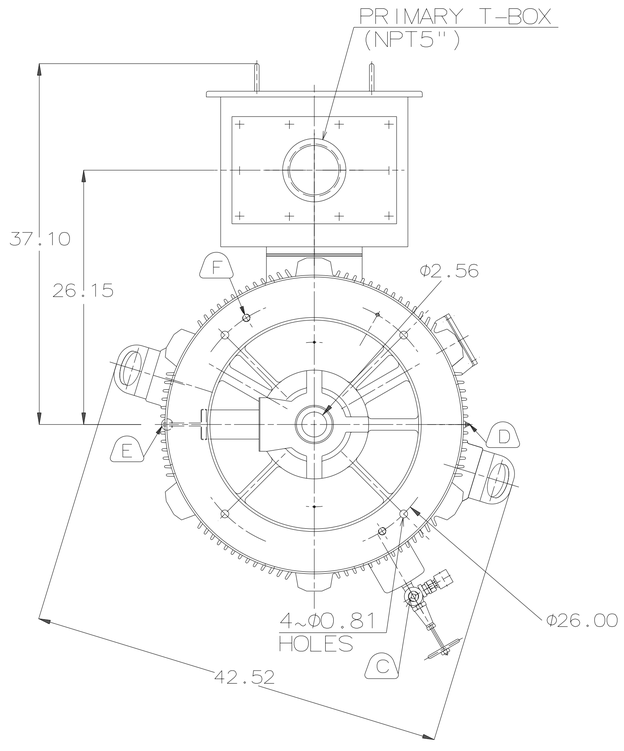


A OIL FILLER [UPPER BEARING]
B OIL GAUGE [UPPER BEARING]
C OIL DRAIN [UPPER BEARING]
D GREASE INLET [LOWER BEARING]
E GREASE DISCHARGER [LOWER BEARING]
F 2~M20 VERTICAL JACKING HOLES,180°APART IN MOTOR BASE.
G M10 TAPPED HOLE IN MOTOR BASE WITH GROUNDING TERMINAL[R38-10] & BOLT LOCATED AS SHOWN.

| | | |
|---|---|---|
| DWN. | Y.YANG | MAY·25·2015 |
| CHKD. | R.LEE | MAY·25·2015 |
| APPD. | C.LIU | MAY·25·2015 |

DATE DEC 08 2016

VHKTP4008

OUTLINE DIMENSIONS

3-PHASE INDUCTION MOTOR

TECO Westinghouse

DWG NO. 4B040L413 REV:00

1/1