| CATALOG NUMBER: VHTP0156 | OUTLINE DIMENSIONS | MOTOR TYPE: AEEHNH |
|---|---|---|
| DATE OCT-03-2017 | 3-PHASE INDUCTION MOTOR | FRAME NO. 284TP |

| Pole | HP | kW | Hz | VOLT | r/min(rpm) |
|---|---|---|---|---|---|
| 6 | 15 | 11.2 | 60 | 230/460 | 1200 |

| Ins | Rating | Dimension in | Approx Weight | Bearings |
|---|---|---|---|---|
| F | CONT. | inches | 460 LBS | DE:6311ZZC3 NDE: 7312BE |

Totally Enclosed Fan-Cooled Vertical Type.Squirrel-cage Rotor.

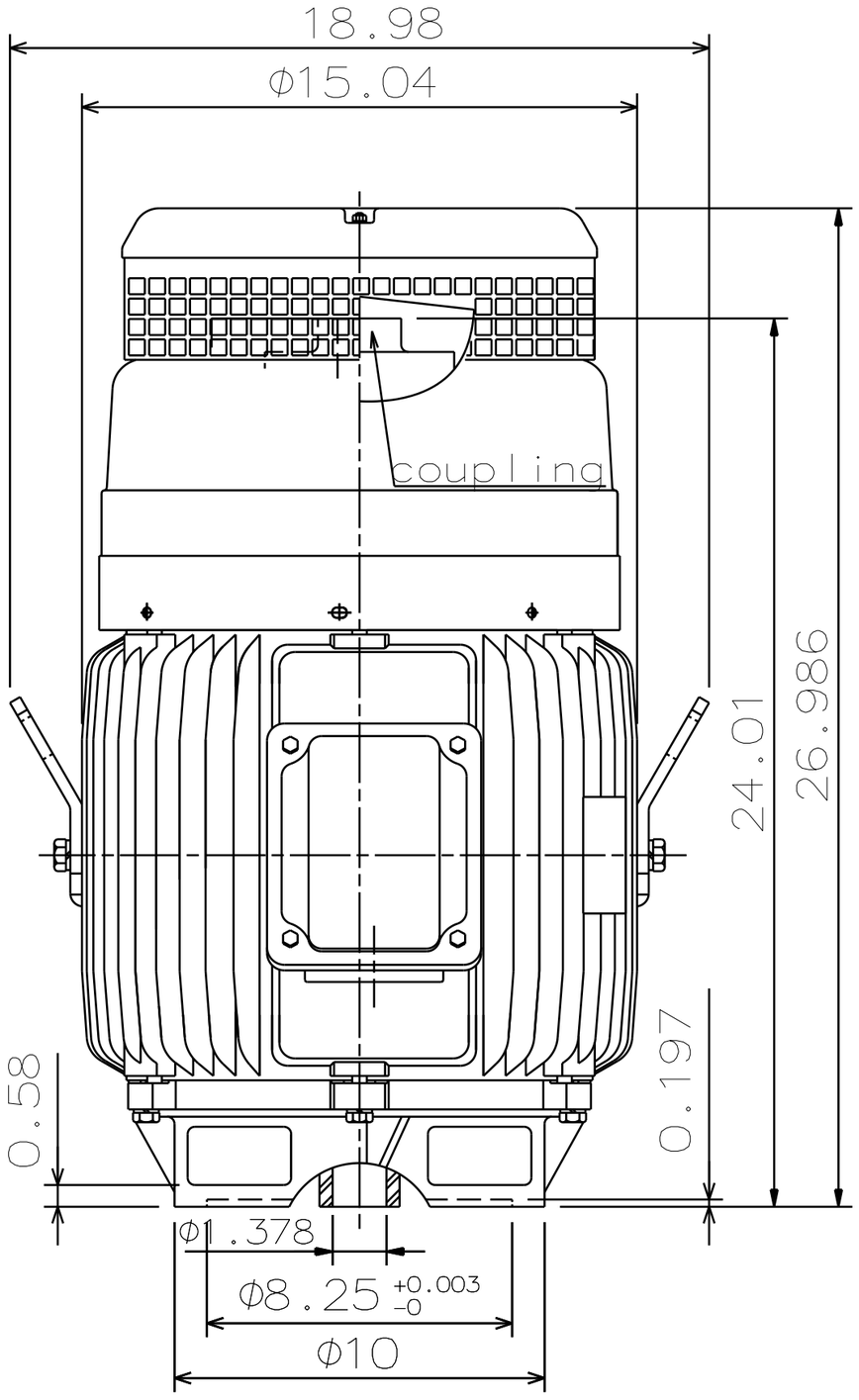


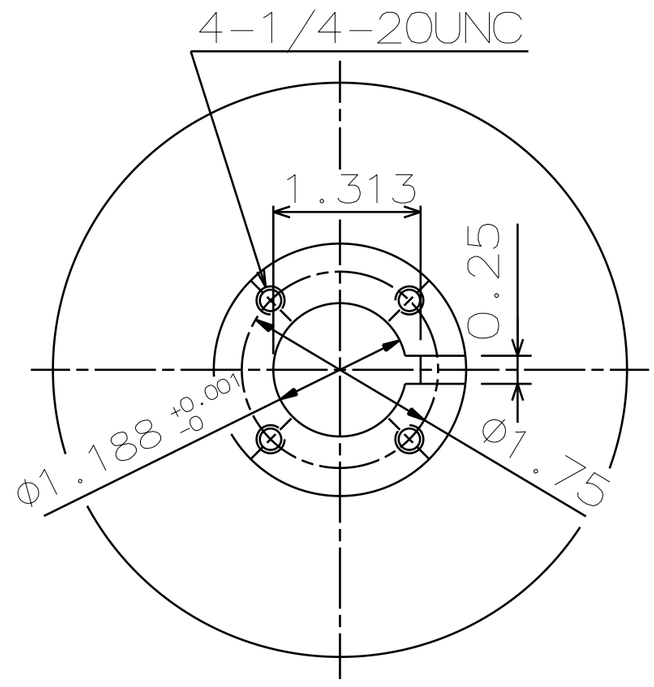


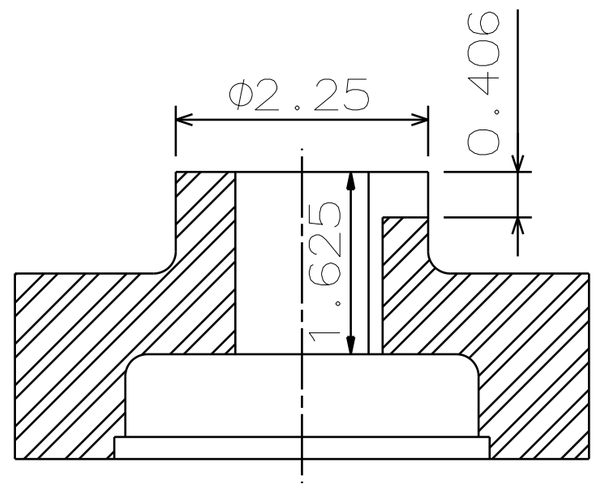


Coupling Dimension

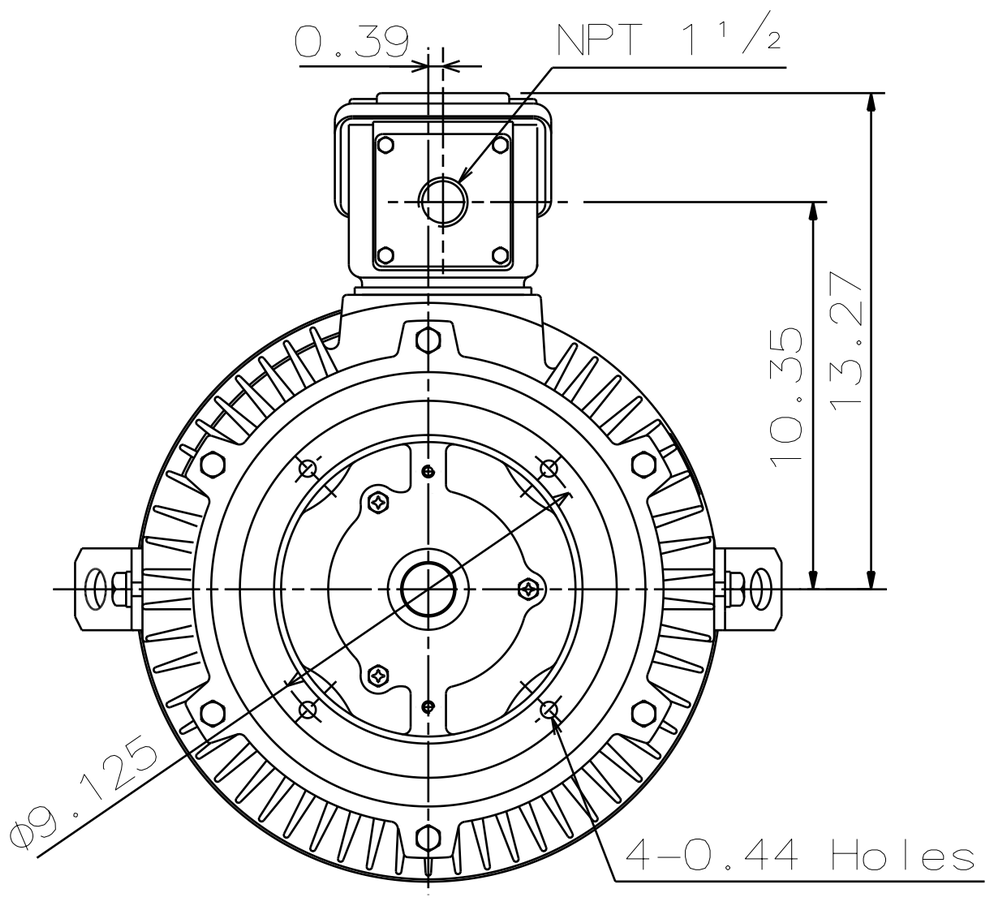


Note:
1. IP44 Protection.
2. Rotation:C.C.W. (View from Top)
3. With Ball Type N.R.R.
4. Down Thrust:3850lbs. (L10:8800 hours)
5. Space Heater Rated At 120 volts. Leads Terminate In The Main Lead Box.

E617350 7T1

| | | | |
|---|---|---|---|
| 2 | 04.14.17 | Fan Cover Dimension Change | |

| | | | | |
|---|---|---|---|---|
| DWG. | | 12•21•16 | TECO Westinghouse | DWG NO. 31057D368692 |
| CHKD. | | 12•22•16 | | |
| APPD. | | 12•22•16 | | |