TYPE	OUTPUT		POLE	TIME RATING	VOLTAGE V	Hz	SYN.SPEED R.P.M
	HP.	kW.					
AEEHNH	500	372.8	6	CONT	460	60	1200

TOTALLY ENCLOSED FAN-COOLED VERTICAL HOLLOW SHAFT TYPE, SQUIRREL CAGE ROTOR

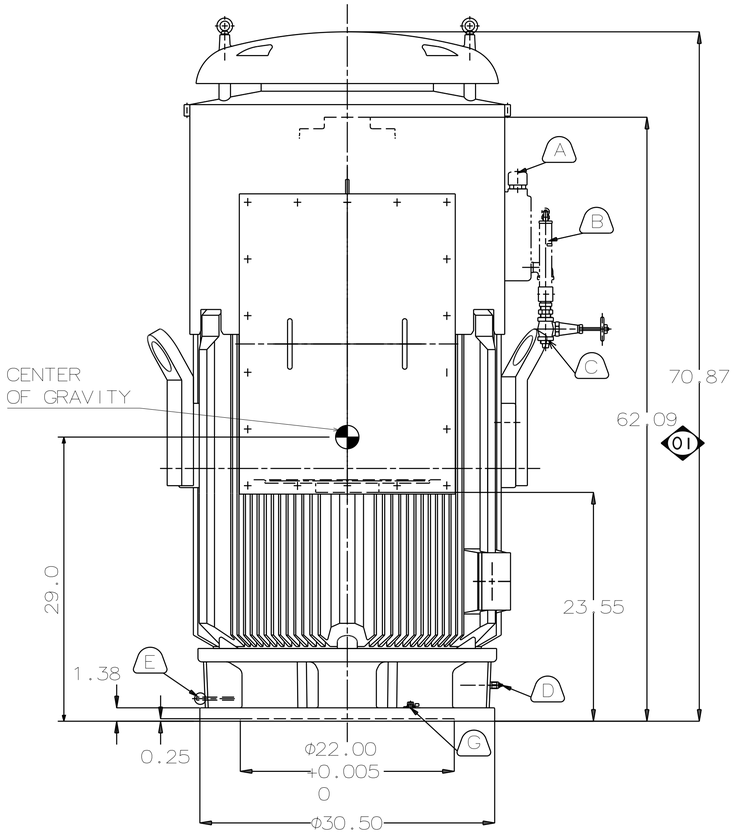

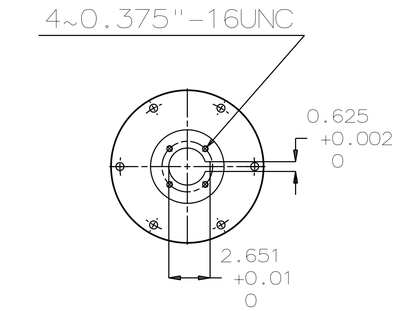

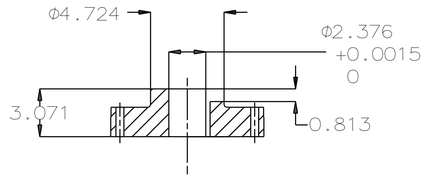

COUPLING
[ENLARGED VIEW]

NOTE:
1. DIMENSIONS IN INCH
2. FRAME NO.5808
3. F CLASS INSULATION, S.F.: 1.15
4. FOR DIRECT COUPLING.
5. BEARING SIZE:
   UPPER BEARING: 7328B [INSULATED]
   LOWER BEARING: 6320C3[UNINSULATED]
6. UPPER BEARING IS INSULATED. ANY METAL CONNECTIONS TO IT MUST BE INSULATED.
7. LUBRICATION:
   UPPER BEARING USE OIL.
   OIL VISCOSITY: ISO VG68 [300SSU AT 100 °F]
   OIL QUANTITY: 3.4 GAL
   LOWER BEARING USE GREASE.[MOBIL POLYREX EM)
8. ROTATION: COUNTER-CLOCKWISE[VIEW FROM TOP].
9. WITH NON-REVERSE RATCHET MECHANISM.
10. WITH GIB KEY:0.625X0.625X3.07,1PCS
11. APPROXIMATE WEIGHT: 6390
12. REED FREQUENCY: 44 HZ
13. DOWNTHRUST: 20,200 LBS
    (L10-8800HRS)
14. SPACE HEATER RATED AT 120 VOLT, SINGLE PHASE, 218 WATTS, LEADS TERMINATE IN MAIN LEAD BOX.

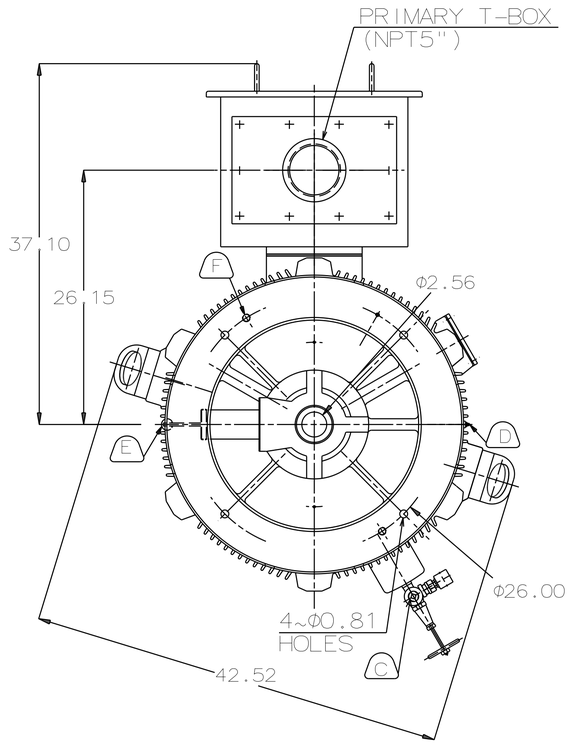

A OIL FILLER [UPPER BEARING]
B OIL GAUGE [UPPER BEARING]
C OIL DRAIN [UPPER BEARING]
D GREASE INLET [LOWER BEARING]
E GREASE DISCHARGER [LOWER BEARING]
F 2~M20 VERTICAL JACKING HOLES,180°APART IN MOTOR BASE.
G M10 TAPPED HOLE IN MOTOR BASE WITH GROUNDING TERMINAL[R38-10] & BOLT LOCATED AS SHOWN.

DWN.	C.FU	APR•17•2015
CHKD.	R.LEE	APR•17•2015
APPD.	C.LIU	APR•17•2015

DATE DEC 08 2016

VHTP5006

OUTLINE DIMENSIONS

3-PHASE INDUCTION MOTOR

TECO Westinghouse

DWG NO. 4B040L122 REV:01

1/1