TYPE	OUTPUT		POLE	TIME RATING	VOLTAGE V	Hz	SYN.SPEED R.P.M
	HP.	kW.					
AMRKED	500	372.8	6	CONT	2300/4000	60	1200

ENCLOSED VENTILATED VERTICAL SOLID SHAFT TYPE,SQUIRREL CAGE ROTOR
NEMA WEATHER PROTECTED TYPE I

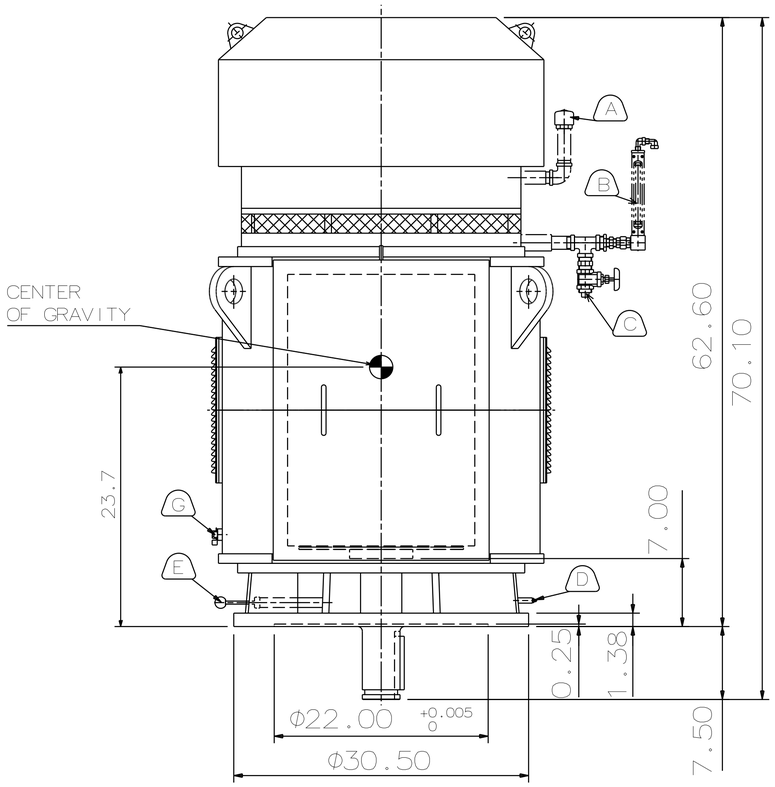

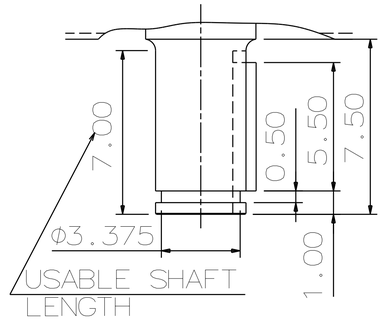

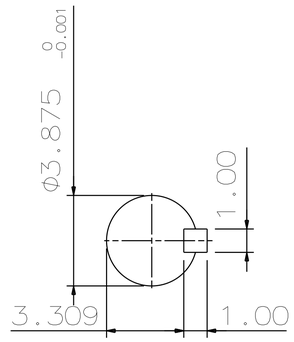

SHAFT END
(ENLARGED VIEW)

NOTE:
1. DIMENSIONS IN INCH
2. FRAME NO.5806
3. F CLASS INSULATION, S.F. 1.15
4. FOR DIRECT COUPLING
5. BEARING SIZE:
   UPPER BEARING: 29330+6028 (INSULATED
   LOWER BEARING: 6224C3 [UNINSULATED]
6. UPPER BEARING IS INSULATED. ANY METAL CONNECTIONS TO IT MUST BE INSULATED.
7. LUBRICATION:
   UPPER BEARING USE OIL.
   OIL VISCOSITY: ISO VG68 [300 SSU/100°F]
   OIL QUANTITY: 2.9 GAL.
   LOWER BEARING USE GREASE.[MOBIL POLYREX EM]
8. ROTATION: COUNTER-CLOCKWISE[VIEW FROM TOP].
9. WITH NON-REVERSE RATCHET MECHANISM.
10. APPROXIMATE WEIGHT: 4730
11. DOWNTHRUST: 33,600 LBS
    (L10-8800HRS)
12. REED FREQUENCY: 45 HZ
13. SPACE HEATER RATED AT 120 VOLT, SINGLE PHASE, 200 WATTS, LEADS TERMINATE IN MAIN LEAD BOX.

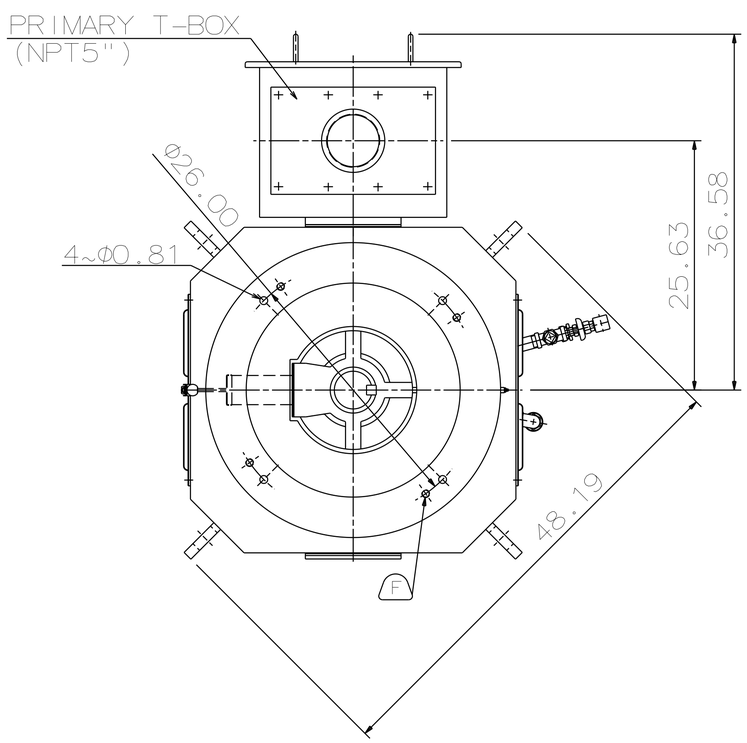

A OIL FILLER [UPPER BEARING]
B OIL GAUGE [UPPER BEARING]
C OIL DRAIN [UPPER BEARING]
D GREASE INLET [LOWER BEARING]
E GREASE DISCHARGER [LOWER BEARING]
F 4~M20 VERTICAL JACKING HOLES,90°APART IN MOTOR BASE.
G M10 TAPPED GROUNDING ON FRAME,WITH ONE GROUNDING STUDS & [R38-10] TERMINAL LOCATED AS SHOWN.

DWN.	Y.YANG	JUN·02·2015
CHKD.	R.LEE	JUN·02·2015
APPD.	C.LIU	JUN·02·2015

DATE DEC 08 2016

VSKP5006

OUTLINE DIMENSIONS

3-PHASE INDUCTION MOTOR

TECO Westinghouse

DWG NO. 4B040L494 REV:00

1/1