CATALOG NUMBER: VSTP0504	OUTLINE DIMENSIONS	MOTOR TYPE: AEEHED
DATE SEP-29-2017	3-PHASE INDUCTION MOTOR	FRAME NO. 326VP

Pole	HP	kW	Hz	VOLT	Syn.Speed r/min(rpm)
4	50	37	60	230/460	1800

Ins	Rating	Dimension in	Approx Weight	Bearings
F	CONT.	inches	780 LBS	DE:6312C3 NDE: 7315B

Totally Enclosed Fan-Cooled Vertical Type. Squirrel-cage Rotor.

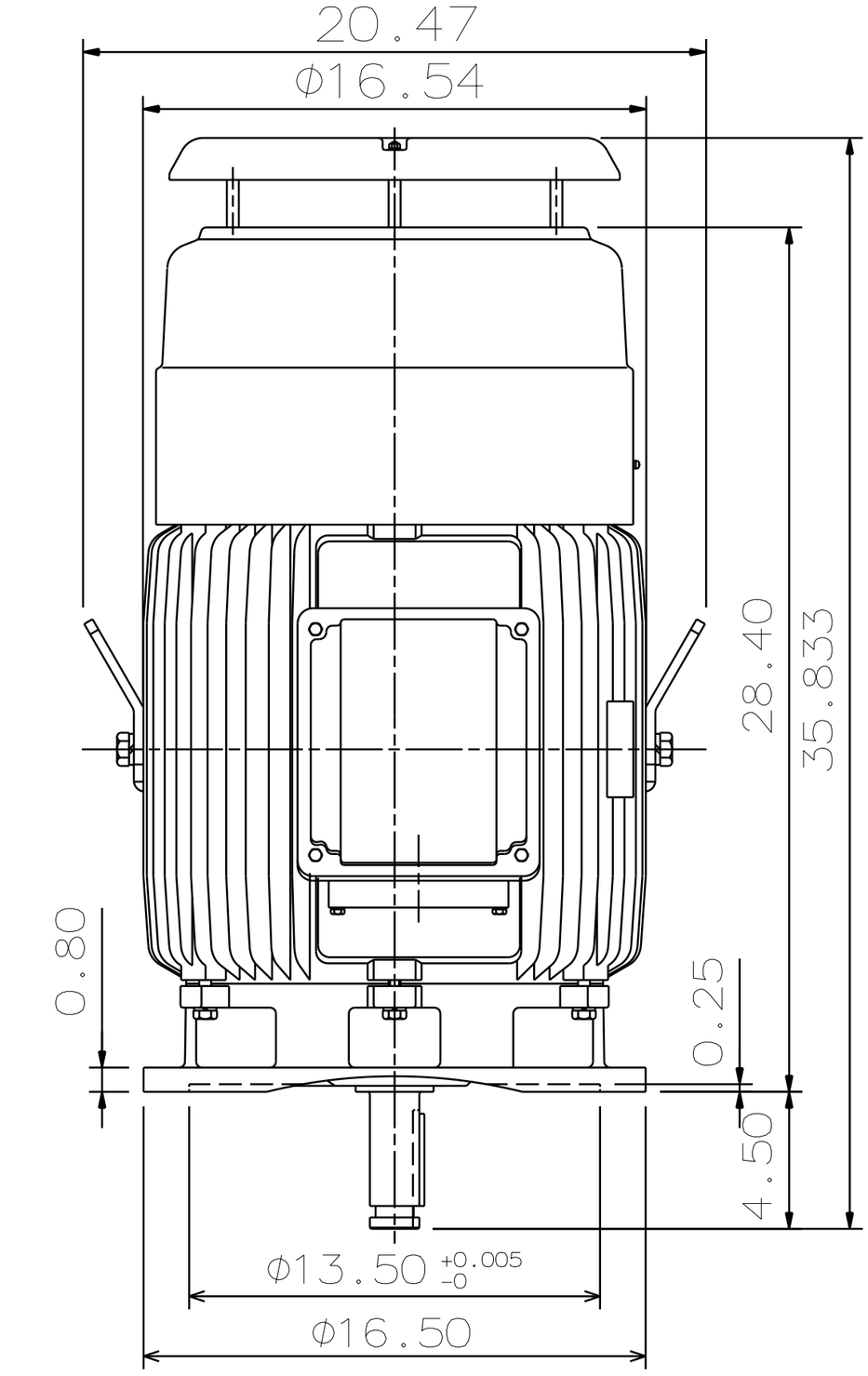

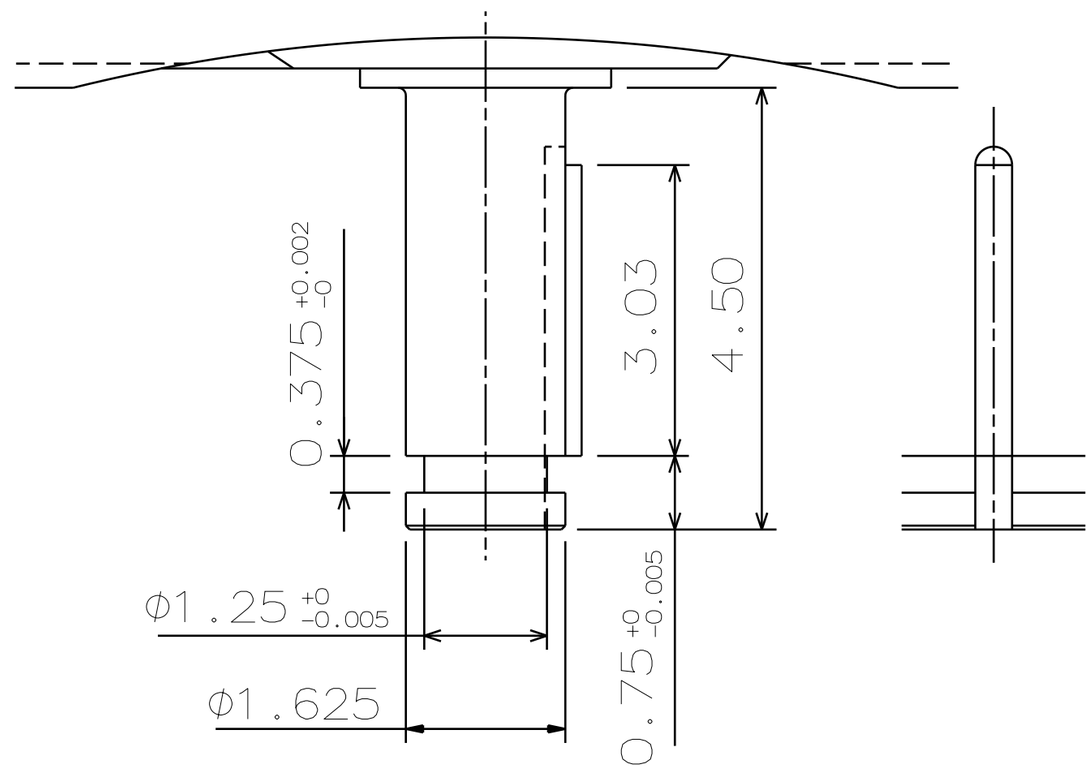

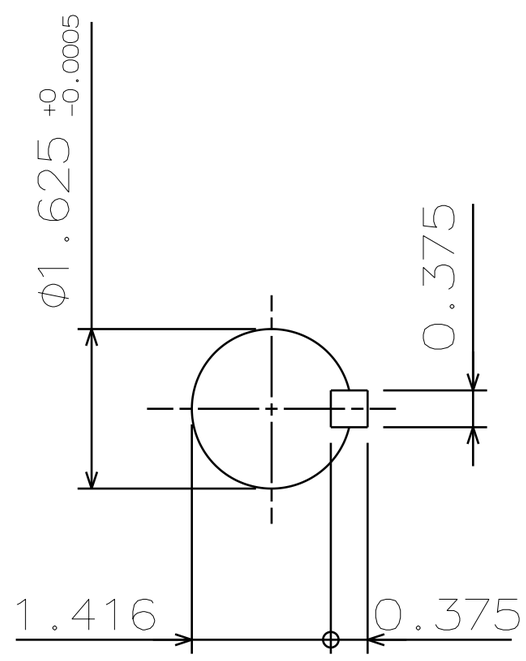

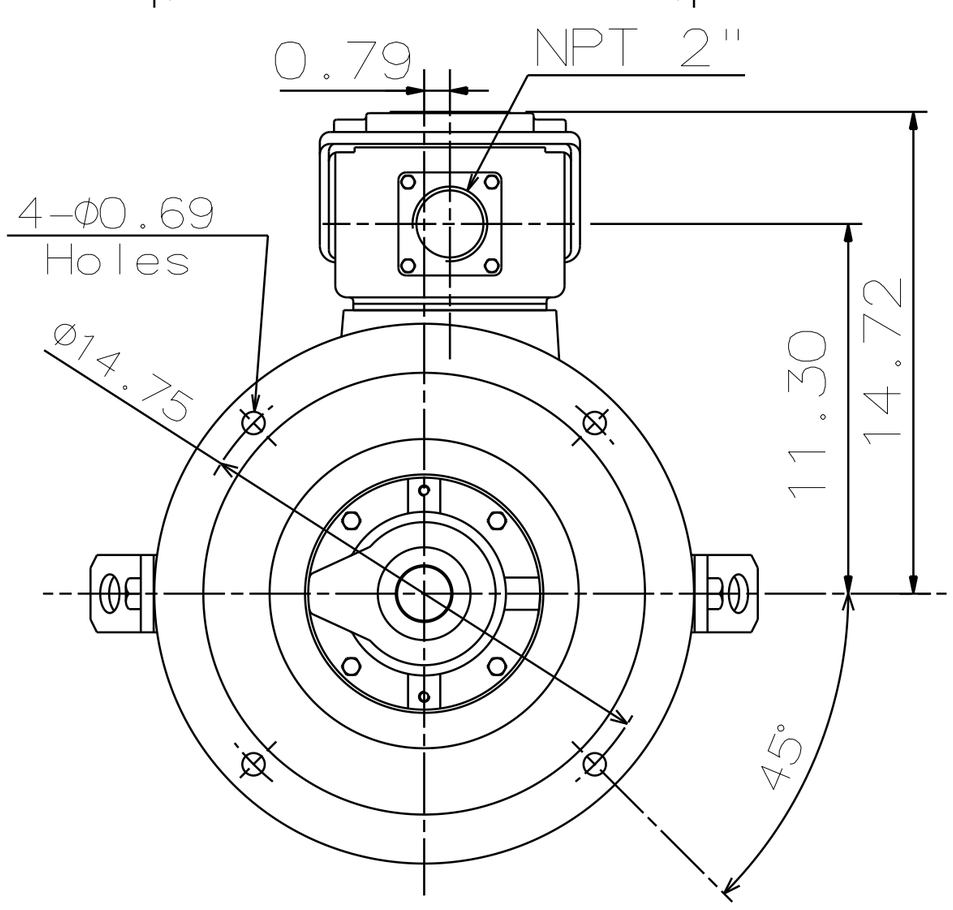

NOTE:

1. CLASS F INSULATION, S.F.: 1.15
2. FOR DIRECT COUPLING.
3. ROTATION: CCW[VIEW FROM TOP].
4. WITH NON-REVERSE RATCHET MECHANISM.
5. DOWNTHRUST: 4500 LBS (L10-8800HRS)
6. SPACE HEATER RATED AT 120 VOLT, SINGLE PHASE, 109 WATTS, LEADS TERMINATE IN MAIN LEAD BOX.

0			

DWN.	K.L.KUO	09·30·08	TECO Westinghouse	DWG NO.
CHKD.	K.L.KUO	10·06·08		31057H417190
APPD.	M.C.TSAI	10·06·08		