TYPE	OUTPUT		POLE	TIME RATING	VOLTAGE V	Hz	SYN.SPEED R.P.M
	HP.	kW.					
AEEHED	300	223.7	4	CONT	460	60	1800

TOTALLY ENCLOSED FAN-COOLED VERTICAL SOLID SHAFT TYPE, SQUIRREL CAGE ROTOR

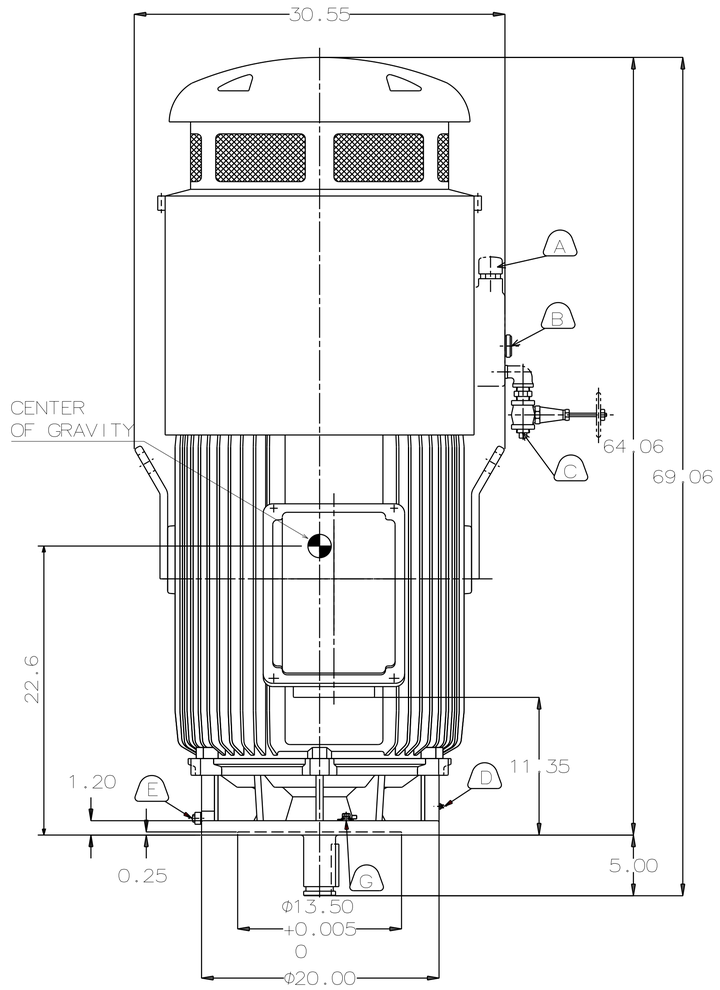

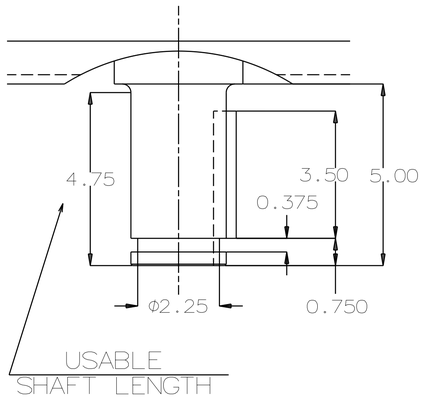

NOTE:
1. DIMENSIONS IN INCH
2. FRAME NO.449VP
3. F CLASS INSULATION, S.F.: 1.15
4. FOR DIRECT COUPLING.
5. BEARING SIZE:
   UPPER BEARING: 7326B (UNINSULATED)
   LOWER BEARING: 6318C3 (UNINSULATED)
6. LUBRICATION:
   UPPER BEARING USE OIL.
   OIL VISCOSITY: ISO VG68 [300SSU AT 100°F]
   OIL QUANTITY: 1.8 GAL.
   LOWER BEARING USE GREASE.(MOBIL POLYREX EM)
7. ROTATION: COUNTER-CLOCKWISE[VIEW FROM TOP].
8. WITH NON-REVERSE RATCHET MECHANISM.
9. APPROXIMATE WEIGHT: 3580
10. REED FREQUENCY: 34 HZ
11. DOWNTHRUST: 10,000 LBS
    (L10-8800HRS)
12. SPACE HEATER RATED AT 120 VOLT, SINGLE PHASE,
    109 WATTS, LEADS TERMINATE IN MAIN LEAD BOX.

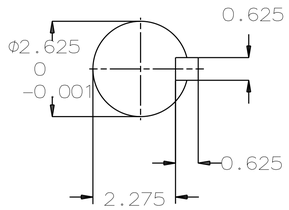

01 SHAFT END
[ENLARGED VIEW]

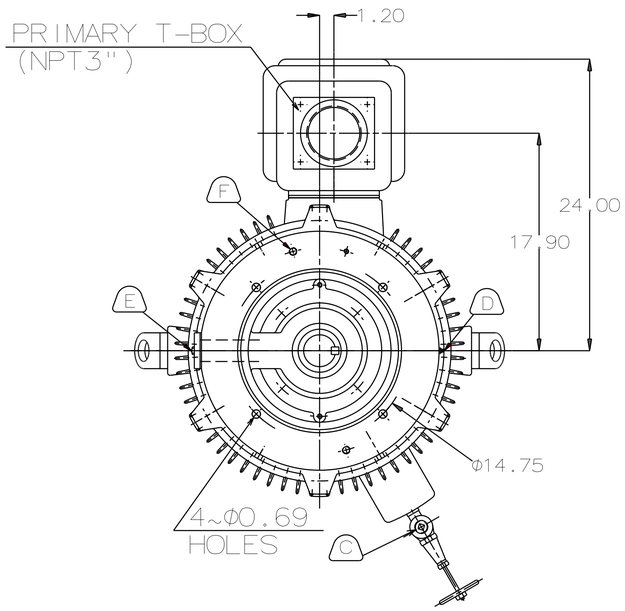

A OIL FILLER [UPPER BEARING]
B OIL GAUGE [UPPER BEARING]
C OIL DRAIN [UPPER BEARING]
D GREASE INLET [LOWER BEARING]
E GREASE DISCHARGER [LOWER BEARING]
F 2~M16 VERTICAL JACKING HOLES 180° APART IN MOTOR BASE.
G M10 TAPPED HOLE IN MOTOR BASE WITH GROUNDING TERMINAL[R38-10] & BOLT LOCATED AS SHOWN.

DWN.	C.FU	APR·29·2015
CHKD.	R.LEE	APR·29·2015
APPD.	C.LIU	APR·29·2015

DATE DEC 08 2016

VSTP3004

OUTLINE DIMENSIONS

3-PHASE INDUCTION MOTOR

TECO Westinghouse

DWG NO. 4B040L257 REV:01

1