| CATALOG # | TYPE | FRAME | OUTPUT HP | OUTPUT kW | POLE | SYN. SPEED R.P.M. | VOLTAGE V. | Hz. | TIME RATING | INSULATION CLASS | SERVICE FACTOR | WEIGHT LBS |
|---|---|---|---|---|---|---|---|---|---|---|---|---|
| WFPV0024C | AEGPCW | C56C | 2 | 1.49 | 4 | 1800 | 230/460 | 60 | CONT. | F | 1.15 | 62 |

# TOTALLY ENCLOSED FAN-COOLED TYPE. SQUIRREL CAGE MOTOR

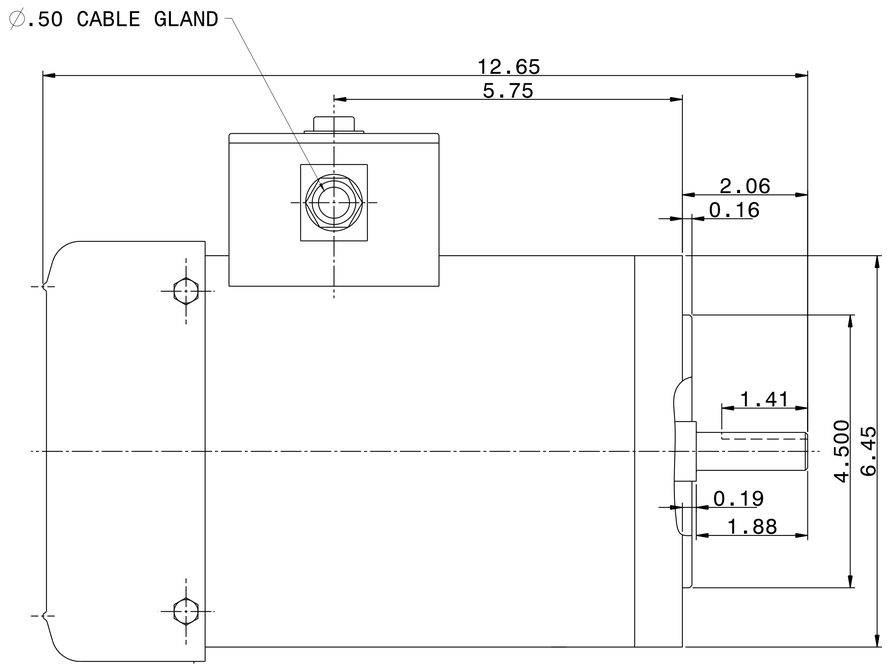


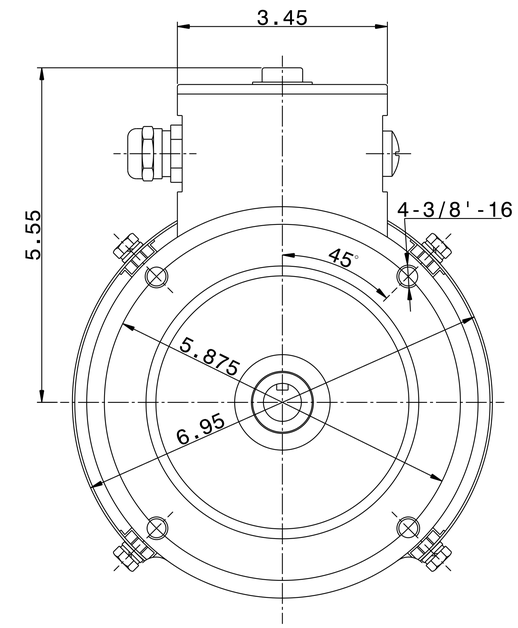


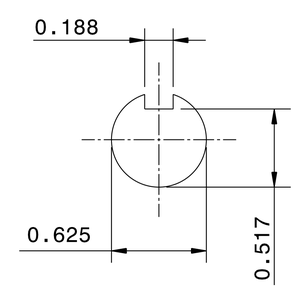


NOTES:
1. DIMENSIONS IN INCH.
2. ENCLOSURE: IP66.
3. FOR DIRECT FLEXIBLE COUPLING.
4. STAINLESS STEEL CONSTRUCTION.

REV. DATA

REF: 31049J806230

TECO Westinghouse

REV NO 01

3-PHASE INDUCTION MOTOR OUTLINE DIMENSIONS

DWG NO. WFPV0024C

DWN T. FELPS 020713 APPD S. GROHOSKY 020713

TECO-WESTINGHOUSE MOTOR COMPANY ROUND ROCK, TEXAS USA

APPR REV A