CATALOG #	TYPE	FRAME	OUTPUT HP	OUTPUT kW	POLE	SYN. SPEED R.P.M.	VOLTAGE V.	Hz.	TIME RATING	INSULATION CLASS	SERVICE FACTOR	WEIGHT LBS
WP0054C	AEGP	184TC	5	3.73	4	1800	230/460	60	CONT.	F	1.15	104 LBS.

TOTALLY ENCLOSED FAN-COOLED TYPE. SQUIRREL CAGE MOTOR

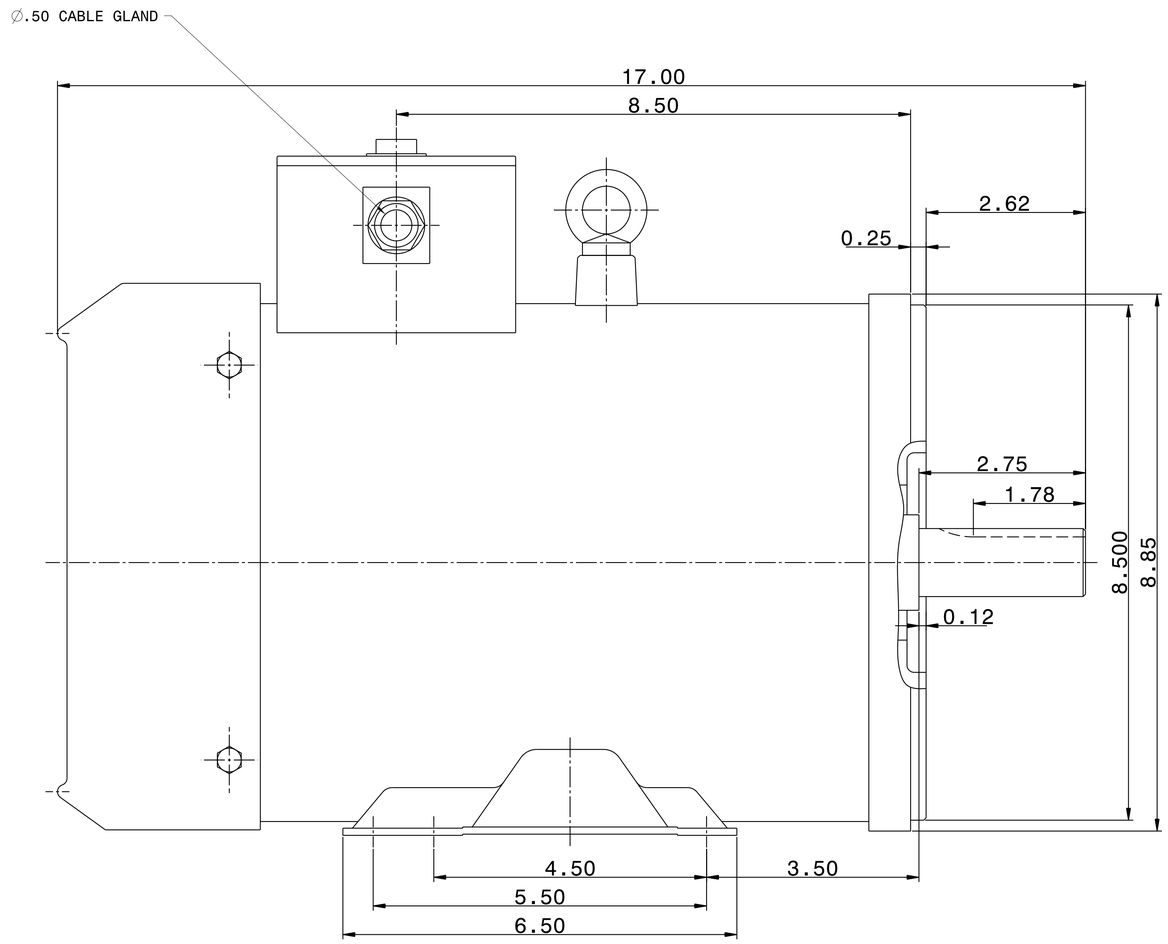

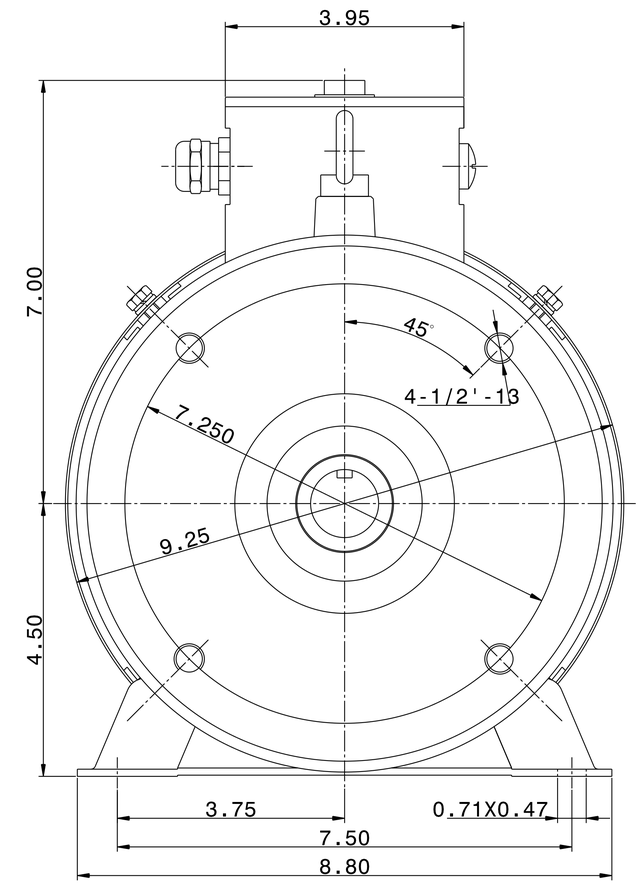

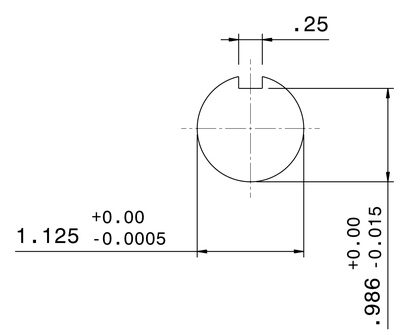

NOTES:
1. DIMENSIONS IN INCH.
2. ENCLOSURE: IP66.
3. FOR DIRECT FLEXIBLE COUPLING.
4. STAINLESS STEEL CONSTRUCTION.

REV. DATA

REF: 31049J806230

TECO Westinghouse

REV NO 01

3-PHASE INDUCTION MOTOR OUTLINE DIMENSIONS

DWG NO. WP0054C

DWN T. FELPS 020713 APPD S. GROHOSKY 020713

TECO-WESTINGHOUSE MOTOR COMPANY ROUND ROCK, TEXAS USA

APPR REV A