CATALOG #	TYPE	FRAME	OUTPUT		POLE	SYN. SPEED R.P.M.	VOLTAGE V.	Hz.	TIME RATING	INSULATION CLASS	SERVICE FACTOR	BEARINGS		WEIGHT LBS
			HP	kW								DE	NDE	
XP3004	AEHHXU	449T	300	224	4	1800	460	60	CONT.	F	1.15	6320C3	6316C3	3000

TOTALLY ENCLOSED FAN-COOLED TYPE. SQUIRREL CAGE MOTOR

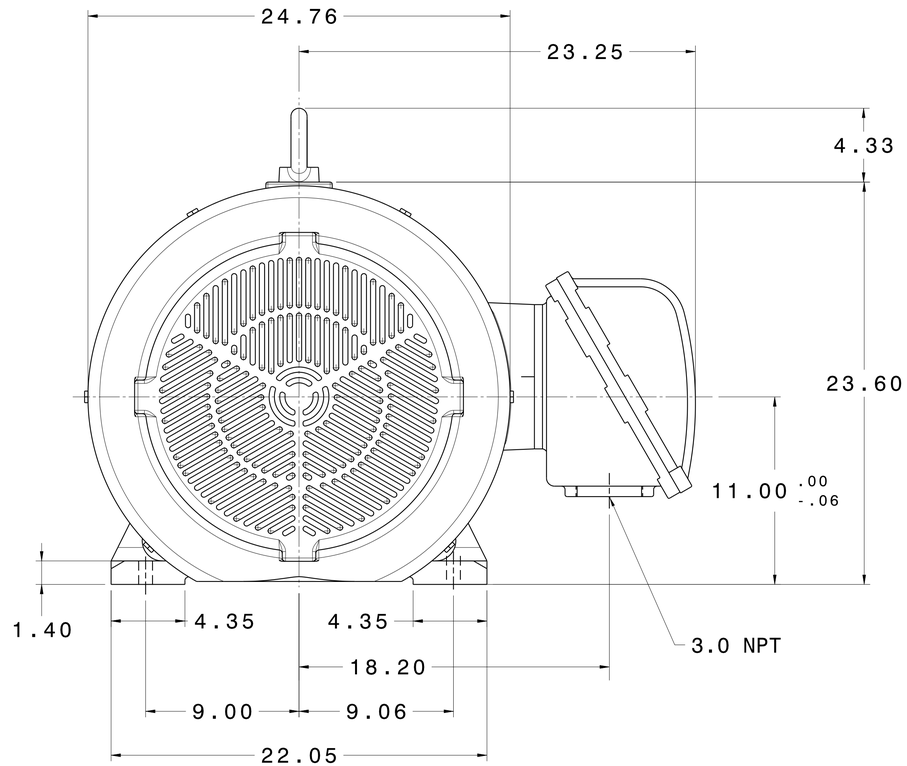

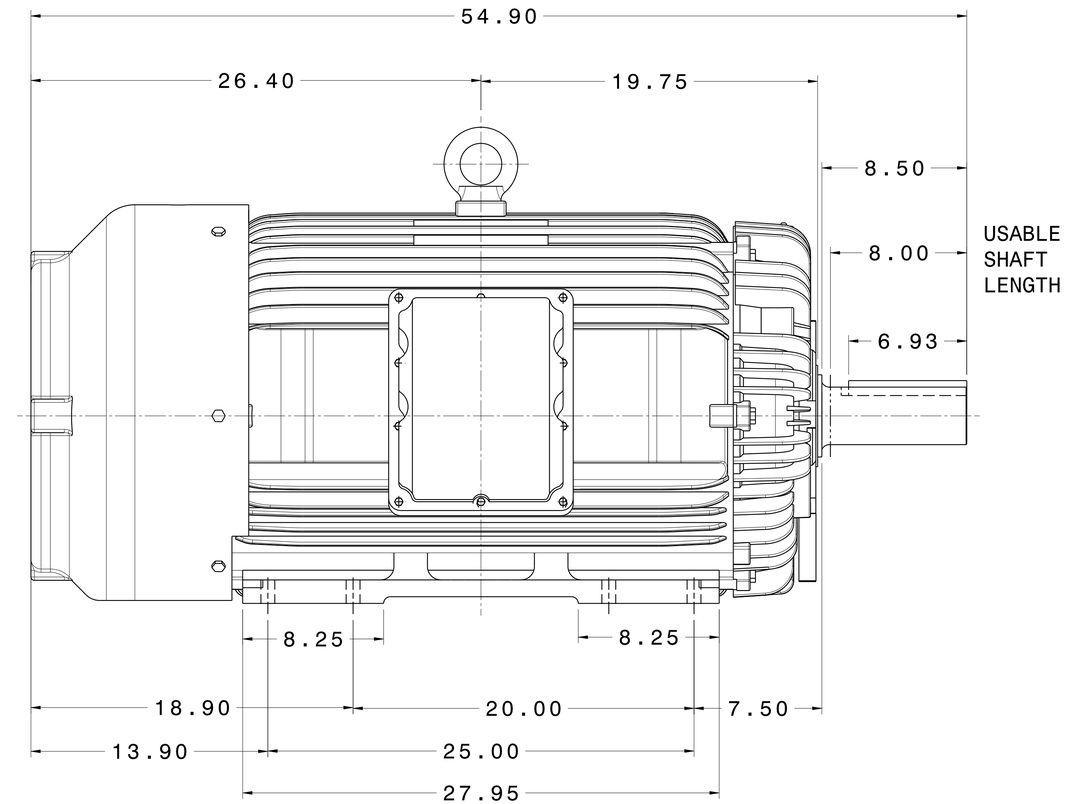

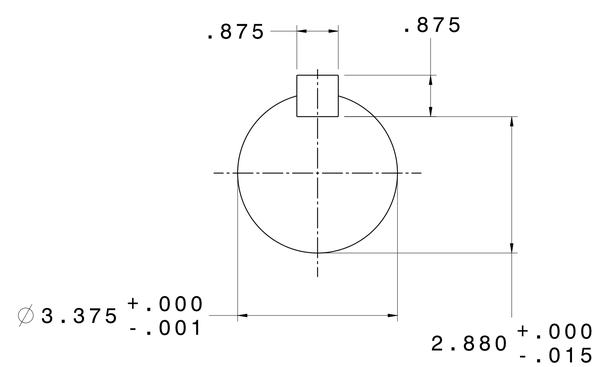

NOTES:

1. DIMENSIONS IN INCH.
2. ENCLOSURE: IP54.
3. FOR DIRECT FLEXIBLE COUPLING.
4. SUITABLE FOR DIVISION I, CLASS I, GROUP D AND CLASS II, GROUPS E,F,G.

REV. DATA

TECO Westinghouse

REV NO 01

3-PHASE INDUCTION MOTOR OUTLINE DIMENSIONS

DWG NO. XP3004

DWN T. FELPS 072314 APPD S. GROHOSKY 072314

TECO-WESTINGHOUSE MOTOR COMPANY ROUND ROCK, TEXAS USA

REF:

APPR REV A