| TYPE | OUTPUT | | POLE | TIME RATING | VOLTAGE V | Hz | SYN. SPEED R. P. M |
|---|---|---|---|---|---|---|---|
| | HP. | kW. | | | | | |
| AEHH-XU | 300 | 224 | 6 | CONT. | 460V | 60 | 1200 |

TOTALLY ENCLOSED FAN-COOLED TYPE. SQUIRREL-CAGE ROTOR.

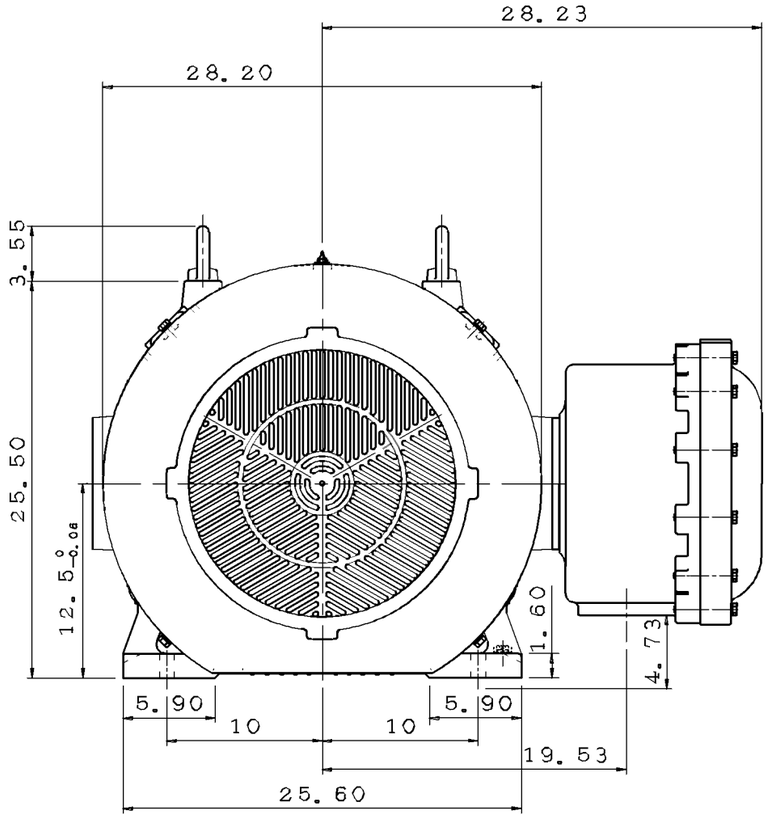


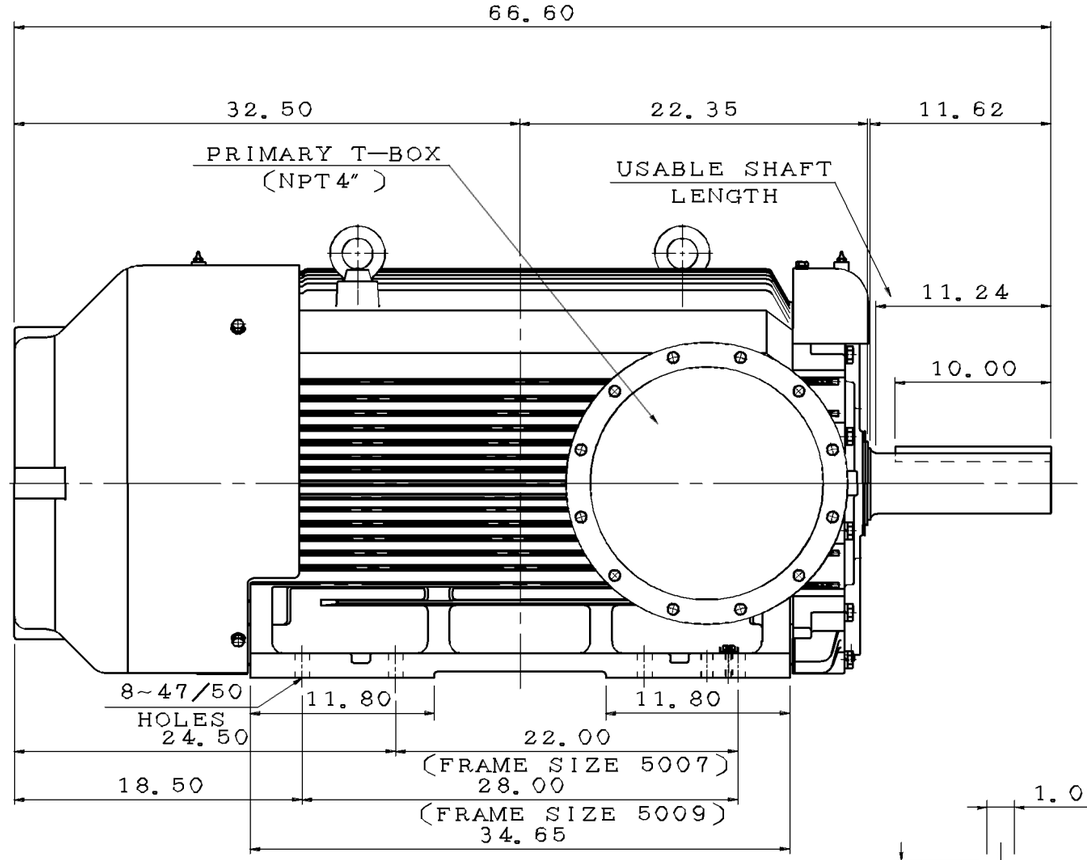


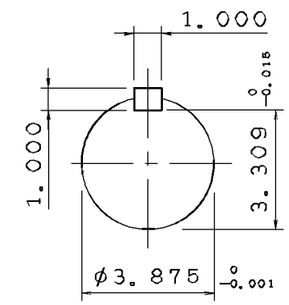


SHAFT END
ENLARGED VIEW

NOTE:
1. DIMENSIONS IN inch
2. FRAME NO. 5009C
3. F CLASS INSULATION, S.F. 1.15
4. FOR DIRECT FLEXIBLE COUPLING
5. ENCLOSURE: IP44
6. BEARING SIZE: DRIVE-END NU324
   OPP. DRIVE-END 6320
7. UL EXPLOSION PROOF
8. NON-SPARKING FAN

| | | |
|---|---|---|
| DWN. | S. WANG | APR·01·2016 |
| CHKD. | C. WANG | APR·01·2016 |
| APPD. | M. HSU | APR·01·2016 |

| | |
|---|---|
| DATE | OUTLINE DIMENSIONS |
| XP3006R | 3-PHASE INDUCTION MOTOR |
| TECO Westinghouse | DWG NO. 4B040Q767 REV:00 |