DATE MAY 18, 2011	OUTLINE DIMENSIONS	MOTOR TYPE: AEHHXU
CATALOG NO. XP7/54	3-PHASE INDUCTION MOTOR	FRAME NO. 213T

Pole	HP	KW	Hz	VOLT	Syn. Speed RPM
4	7.5	5.6	60	230/460	1800

Ins	Rating	Dimension in	Approx Weight	Bearings	
F	CONT.	inches	187 lbs.	DE: 6308ZZ	NDE: 6306ZZ

Totally Enclosed Fan-Cooled Type, Squirrel-Cage Rotor.

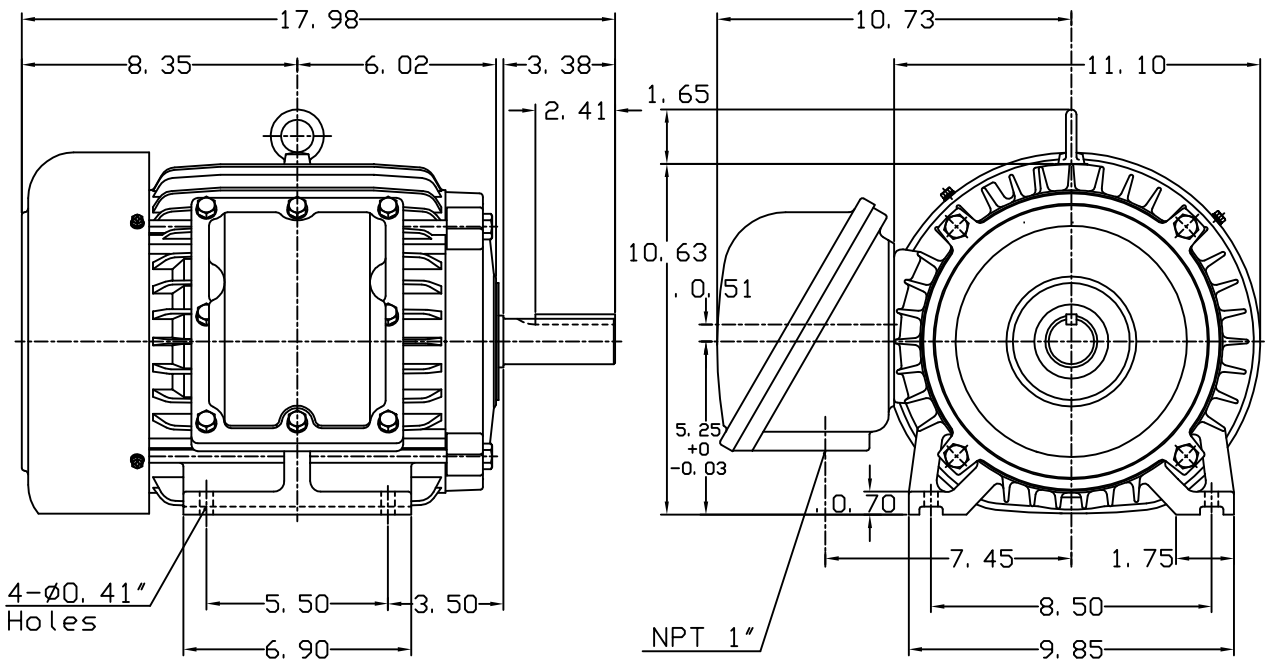

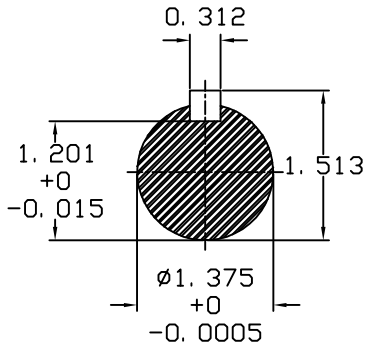

NOTE:
1. EXPLOSION PROOF:
CLASS I GROUP C, D AND
CLASS II GROUP E, F, G.

DWN.	J. H. LIANG	11·12·98	TECO Westinghouse	DWG NO.
CHKD.	C. S. LO	11·23·98		31049H822012
APPD.	Y. B. HUANG	11·23·98		