DATE March 5, 2017	OUTLINE DIMENSIONS	MOTOR TYPE: AEUHXG
Cat. #: XPV0504C	3-PHASE INDUCTION MOTOR	FRAME NO. 326TC

Pole	HP	kW	Hz	VOLT	Syn. Speed r/min(rpm)
4	50	37	60	230/460	1800

Ins	Rating	Dimension in	Approx Weight	Bearings
F	CONT.	inch	781 lbs	DE: 6312 NDE: 6212

Totally Enclosed Fan Cooled Type. Squirrel-cage Rotor.

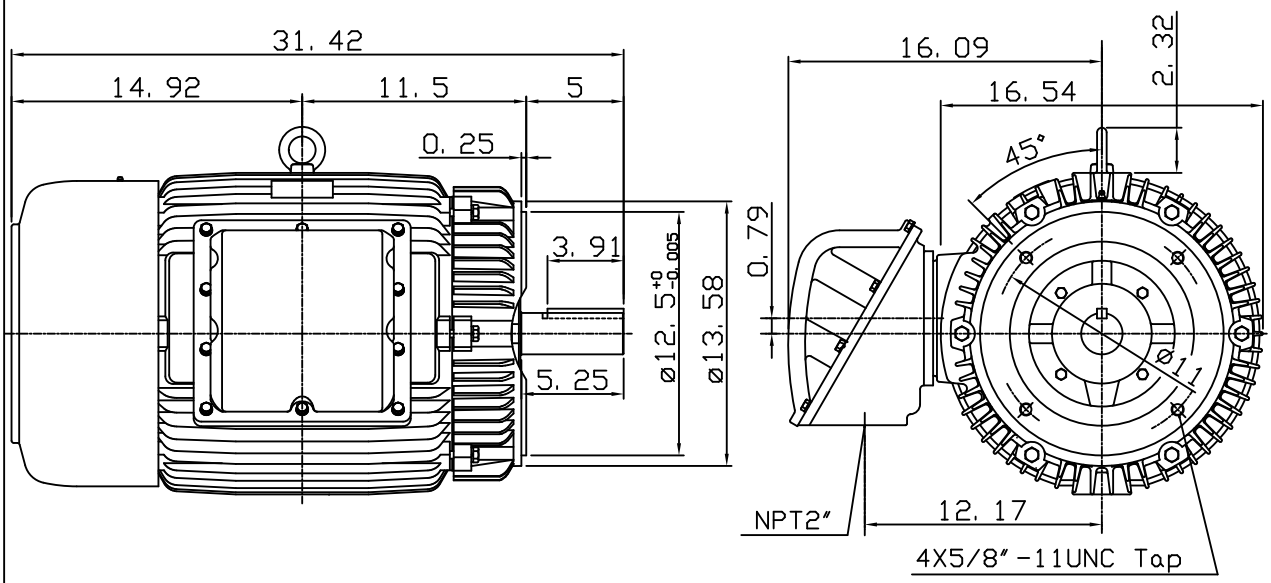

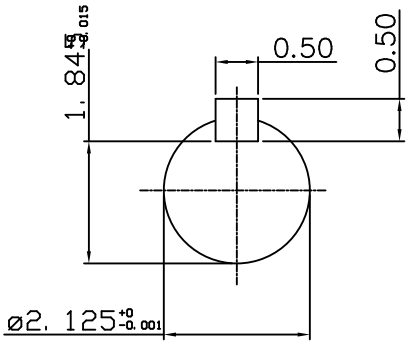

Note:
1. Suitable for Division I, Class I Group D & Class II Group E, F, G, T2D or T3B.

0			

DWN.	G. L. GUO	03·31·03	TECO Westinghouse	DWG NO.
CHKD.	C. H. KAO	04·01·03		31049U564000
APPD.	Y. B. HUANG	04·01·03		