1/4'-28UNF TAP,
DEPTH 0.50

DETAIL A
PROVISION FOR VIBRATION DETECTORS

TYPE	OUTPUT		POLE	TIME RATING	VOLTAGE V	Hz	SYN.SPEED R.P.M
	HP.	kW.					
AFHP	350	261	6	CONT.	2300/4000	60	1200

TOTALLY ENCLOSED FAN-COOLED TYPE. SQUIRREL-CAGE ROTOR

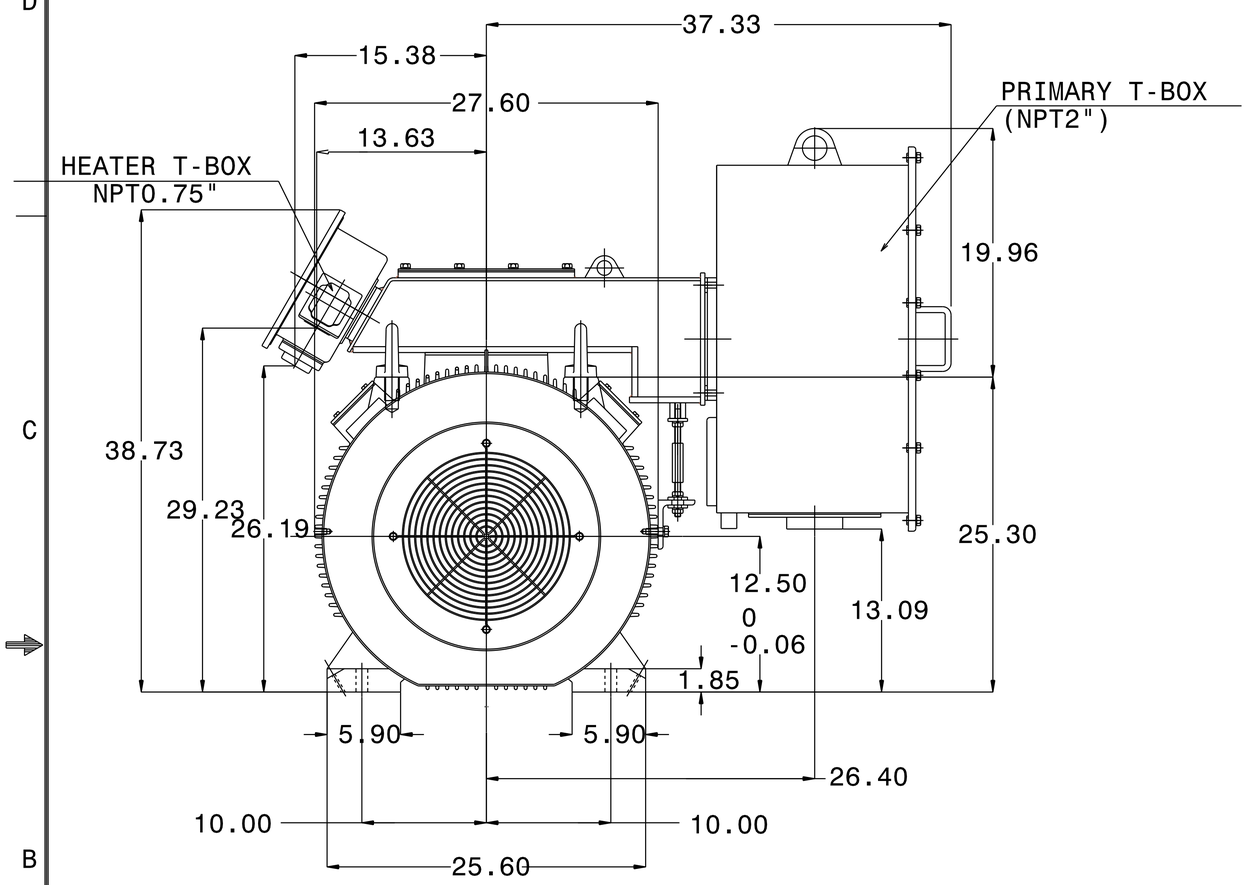

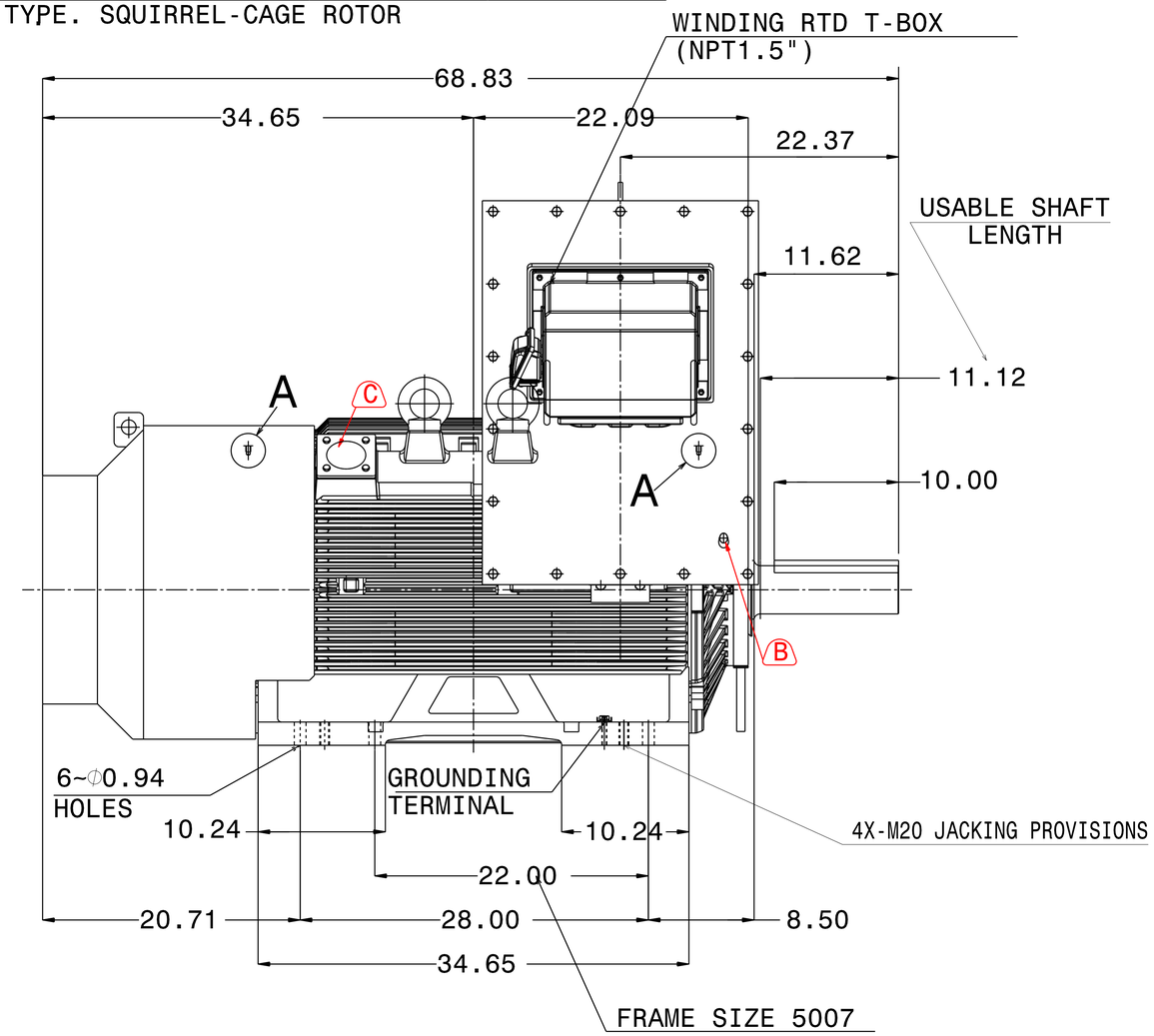

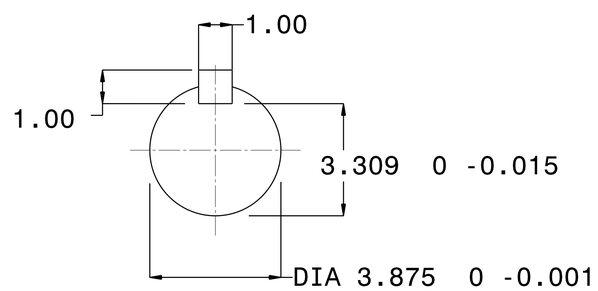

SHAFT END
(ENLARGED VIEW)

NOTE:
1. DIMENSIONS IN inch
2. FRAME NO. 5009B
3. F CLASS INSULATION
4. FOR DIRECT FLEXIBLE COUPLING
5. ENCLOSURE: IP55
6. BEARING SIZE: DRIVE-END 6324C3
   OPP. DRIVE-END 6320C3
7. WITH SAPCE HEATER & WINDING RTD
8. MOTOR APPROX. WEIGHT: 4010 lb

(B) FOR BEARING RTD, END BRACKETS SHALL BE PRE-DRILLED AND PLUGGED.

(C) FOR AUXILIARY, FRAME SHALL BE PRE-DRILLED AND COVERD WITH STEEL PLATE.

DWN.	L.JHENG	APR ·29 2019
CHKD.	H.WANG	APR ·30 2019
APPD.	C.WANG	APR ·30 2019

DATE 5.20.2021

CAT: KPF3506

OUTLINE DIMENSIONS

3-PHASE INDUCTION MOTOR

TECO Westinghouse

DWG NO. 5A040C208 REV: 02

1/1

TECO Westinghouse

ISSUED	PERFORMANCE DATA	ENCLOSURE
April 24, 2020	MEDIUM VOLTAGE MOTOR	TEFC
TYPE		CATALOG#
AFHP		KPF3506

NAMEPLATE INFORMATION

OUTPUT HP	OUTPUT KW	POLE	FRAME SIZE	VOLTAGE	HZ	RATED AMBIENT	INS. CLASS	NEMA DESIGN	TIME RATING	SERVICE FACTOR
350	261	6	5009	2300/4000	60	40°C	F	B	CONT.	1.15

TYPICAL PERFORMANCE

FULL LOAD RPM	EFFICIENCY FULL LOAD MIN. %	EFFICIENCY FULL LOAD NOM. %	EFFICIENCY 3/4 LOAD %	EFFICIENCY 1/2 LOAD %	POWER FACTOR F. L. %	POWER FACTOR 3/4 LOAD %	POWER FACTOR 1/2 LOAD %	MAXIMUM POWER FACTOR CORRECTION
1185	94.7	95.5	94.9	94.5	80.6	77.7	69.2	138.6 KVAR

CURRENTS NO LOAD AT 2300 VOLT	NO LOAD	NO LOAD AT 4000 VOLT	FULL LOAD AT 2300 VOLT	FULL LOAD	FULL LOAD AT 4000 VOLT	LOCKED ROTOR AT 2300 VOLT	LOCKED ROTOR	LOCKED ROTOR AT 4000 VOLT	NEMA KVA CODE LETTER
34.8		20.0	85.2		49.0	554		318	G

TORQUE FULL LOAD lb-ft	TORQUE LOCKED ROTOR %FLT	TORQUE PULL UP %FLT	TORQUE BREAK DOWN %FLT	INERTIA ROTOR WR^2 lb-ft^2	INERTIA NEMA LOAD WK^2 lb-ft^2	INERTIA MAX ALLOWABLE WK^2 lb-ft^2	ACCEL TIME NEMA LOAD WK^2 Sec	ACCEL TIME MAX ALLOWABLE WK^2 Sec
1550	100	90	200	177	3723	5212.2	6.45	8.92

SAFE STALL TIME IN SECONDS COLD	SAFE STALL TIME IN SECONDS HOT	ALLOWABLE STARTS PER HOUR COLD	ALLOWABLE STARTS PER HOUR HOT	SOUND PRESSURE LEVEL @ 3 FT dB(A)
13.3	10.3	2	1	78

APPROVED:	D. Lu	DRAWING NO.	31057KPF3506	REVISION 0

T-N & I-N CURVE

NO.: TWMC20210629591
TYPE: AFHP POLE: 6 kW : 261
HZ: 60 VOLT.: 4160

Ts :	214.3	Kg-m
Tmin. :	192.9	Kg-m
Tmax. :	428.6	Kg-m
Tf :	214.3	Kg-m

Full load current：47.3 A
Lock rotor current / Full load current：646 %

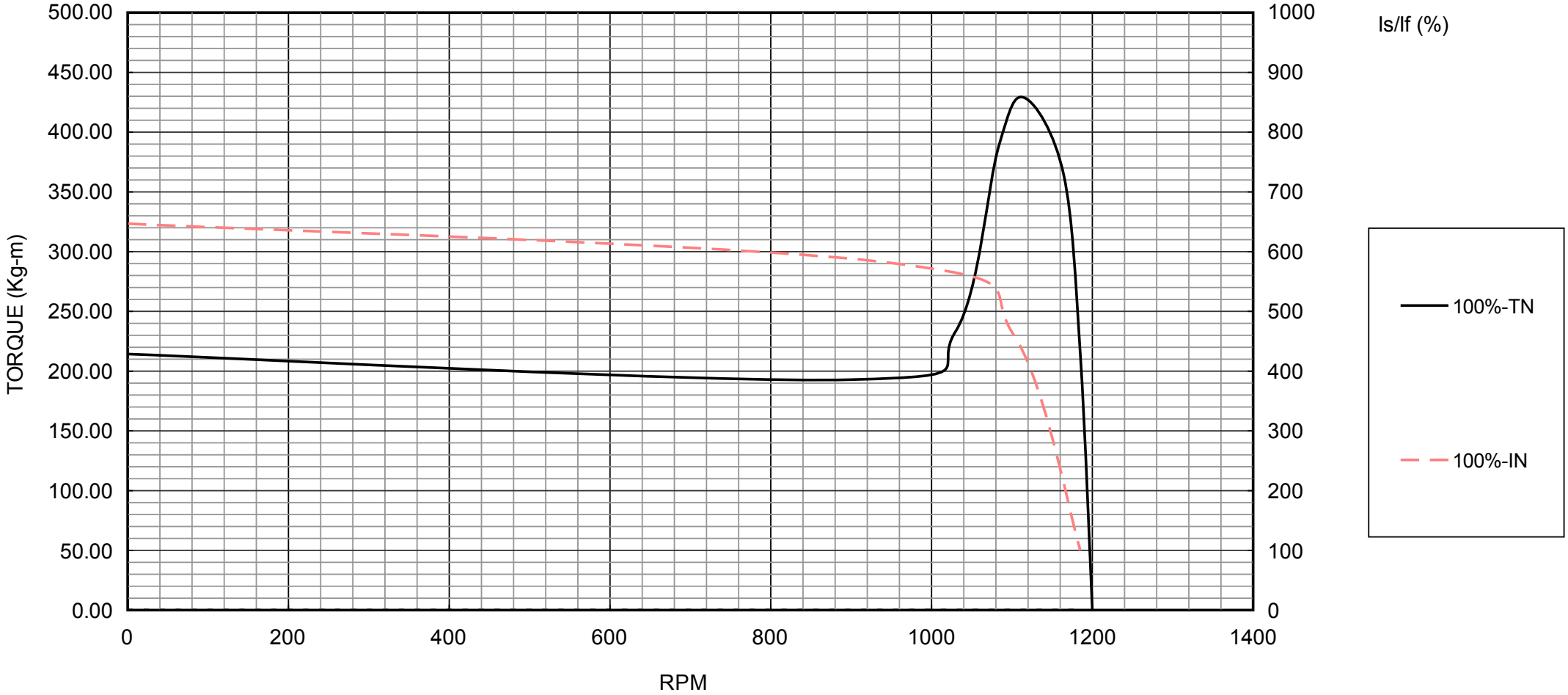

APPD.	US7143044-001	20210629	TECO Electric & Machinery Co., Ltd.	DWG NO. Rev.0 TWMC20210629591 T-I-N
CHKD.	US7143044-001	20210629		
DWN.	US7143044-001	20210629		

Input Ver:0

THREE PHASE INDUCTION MOTOR
LOAD CHARACTERISTIC CURVE

			TYPE	:	AFHP
POLE	:	6	kW	:	261
HZ	:	60	VOLT.	:	4160

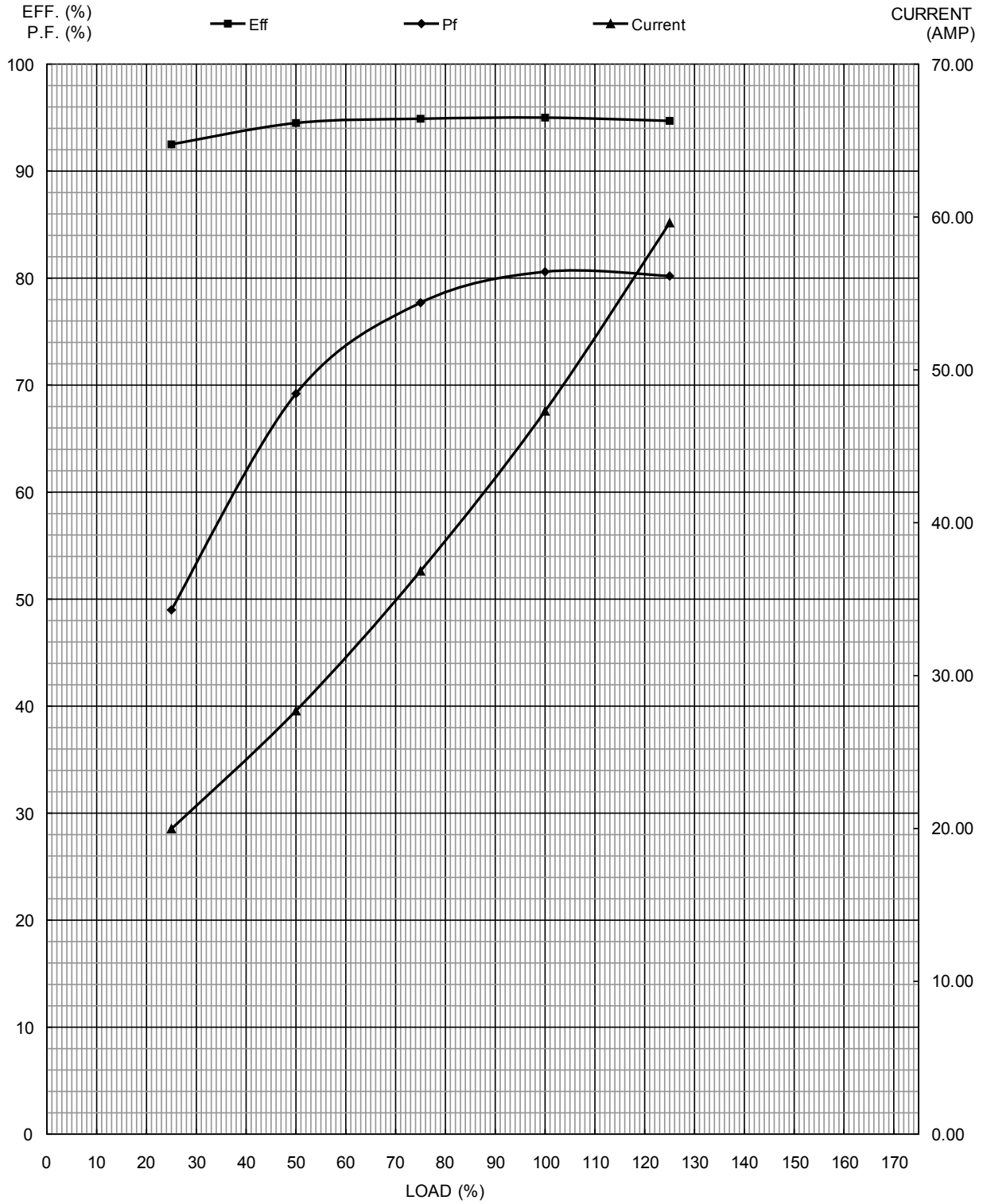

APPD.	S7143044-00	2021/06/29	TECO Electric & Machinery Co., Ltd.	DWG NO.Rev.00
CHKD.	S7143044-00	2021/06/29		TWMC20210629591
DWN.	S7143044-00	2021/06/29		

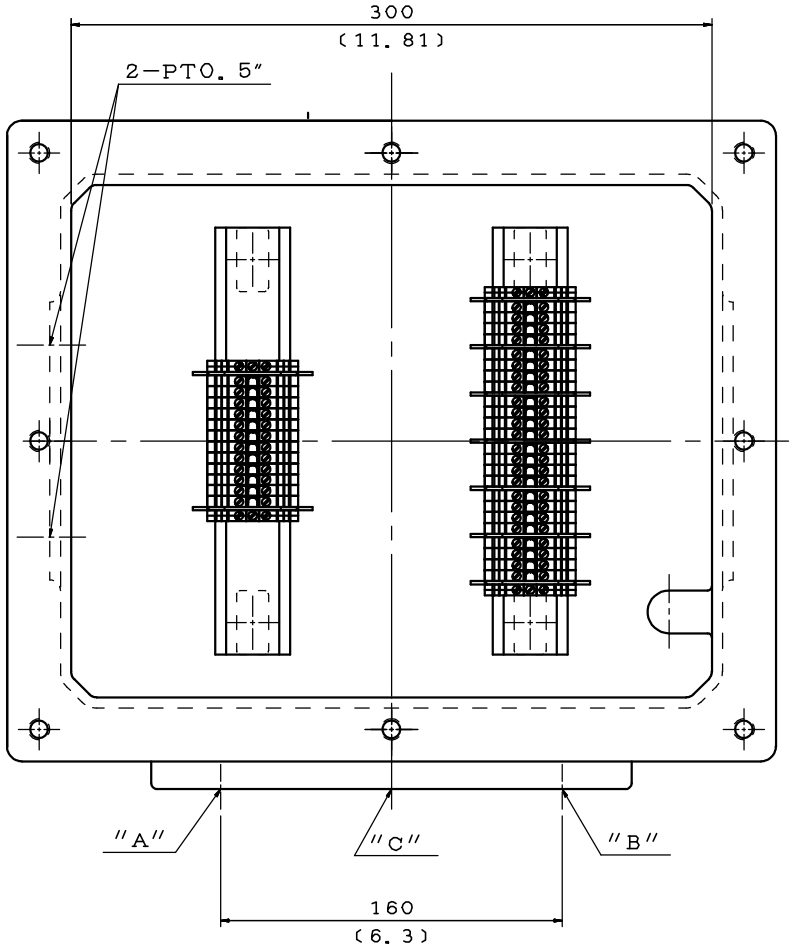

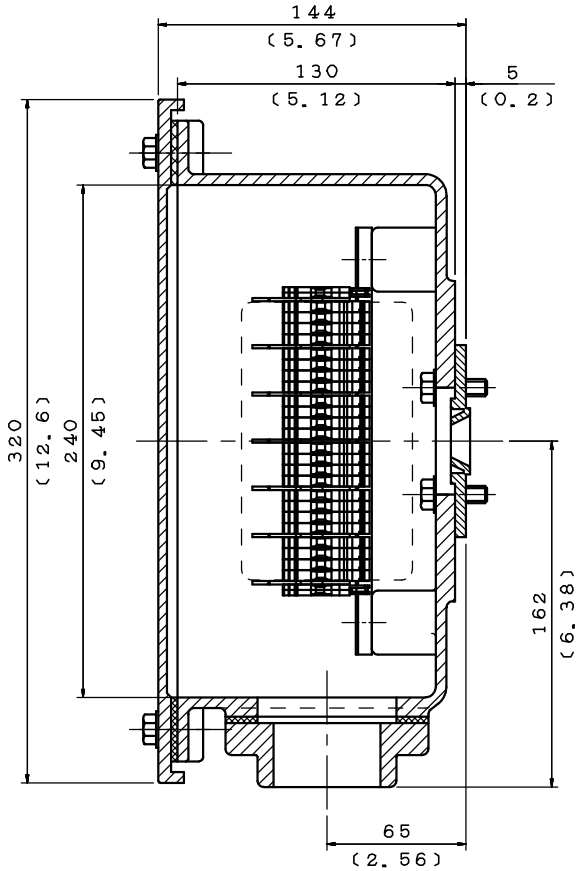

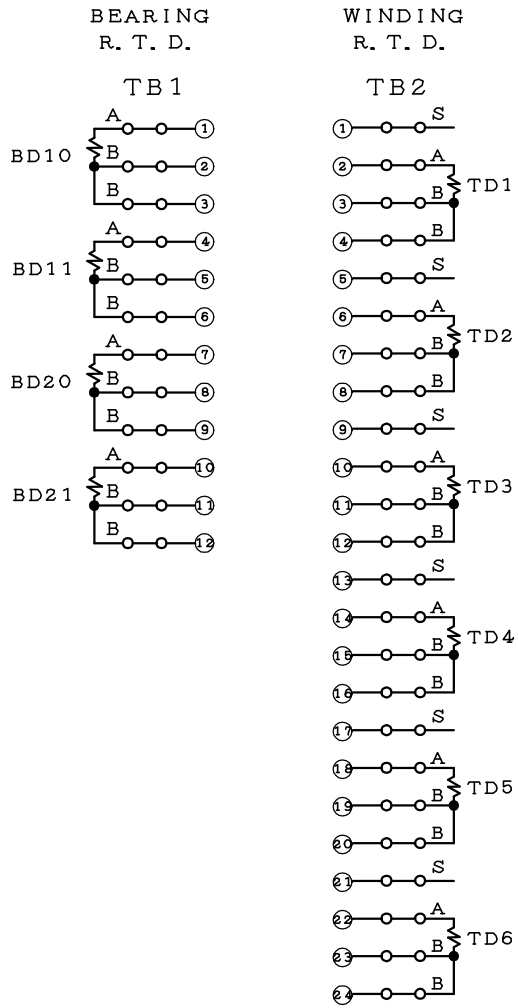

NOTE:
1. DIMENSIONS IN mm (inch)
2. WINDING R.T.D. &
   BEARING R.T.D. T-BOX
3. TD1 & TD2 FOR U PHASE
   TD3 & TD4 FOR V PHASE
   TD5 & TD6 FOR W PHASE
   BD10 & BD11 FOR DRIVE END BEARING
   BD20 & BD21 FOR NON-DRIVE END BEARING

ITEM	"A"	"B"	"C"
01	NPT0.75"	NPT2"	0
02			
03			
04			
05			
06			
07			
08			

DWN.	L.LI	APR.15.2020
CHKD.	K.LEE	APR.16.2020
APPD.	W.CHENG	APR.16.2020

DATE

SCHEMATIC DRAWING

TERMINAL BOX

TECO Westinghouse

DWG NO. 4B040X714 REV:00

1/1

DATE:	CONNECTION DIAGRAM	MODEL:

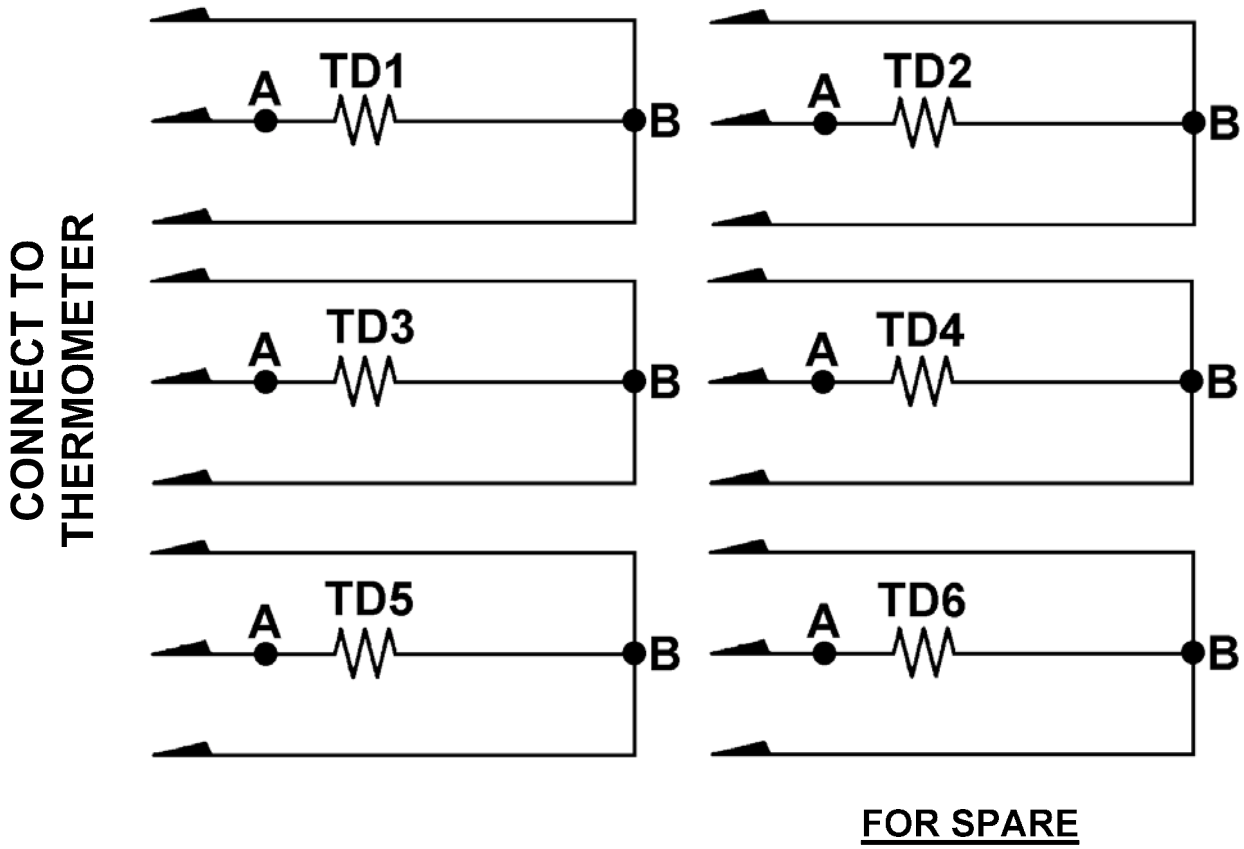

100 OHM PLATINUM R.T.D'S
TWO SETS OF STATOR RTD (6PCS)

STATOR WINDING RESISTANCE TEMPERATURE DETECTOR SCHEMATIC DIAGRAM

DWN.	98·09·08	TECO Westinghouse	DWG NO. REV:00
CHKD.	98·09·08		3A040D098
APPD.	98·09·08		

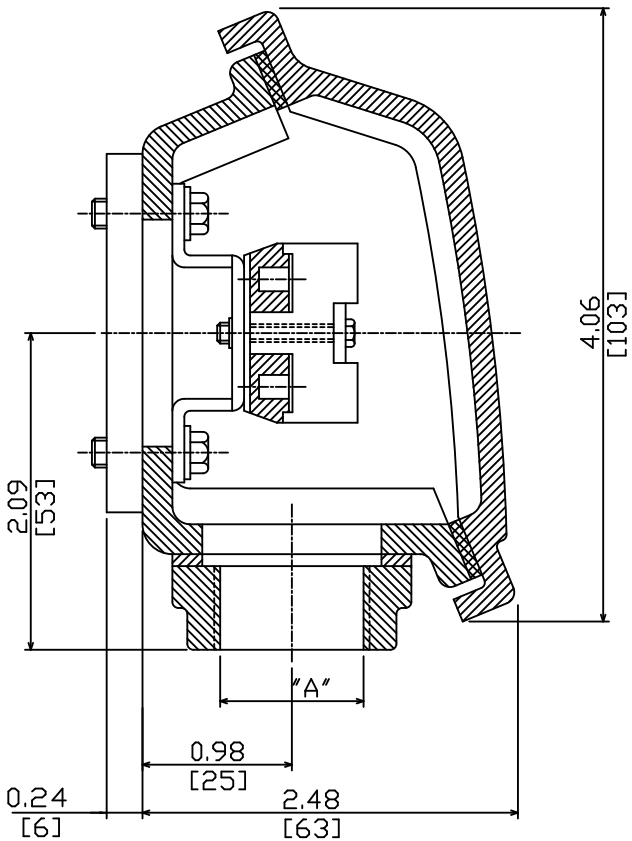

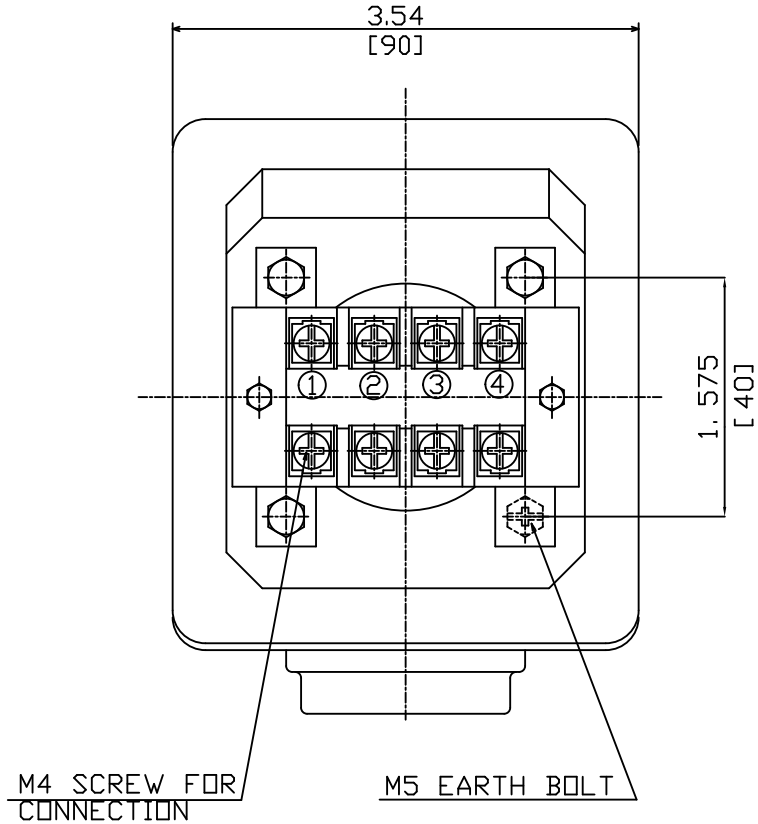

SPACE HEATER
CONNECTION

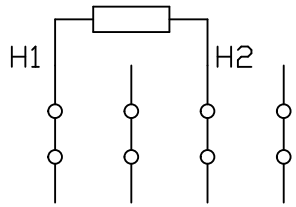

ITEM	A
01	NPT - 0.75"
02	
03	
04	
05	

NOTE:
1. DIMENSIONS IN INCHES [MM].
2. TW-06
3. ENCLOSURE: IP56.
4. SINGLE PHASE POWER SOURCE, SHOULD BE DE-ENERGIZED WHEN MOTOR IS IN OPERATION.

DWN.	H.HUANG	JUL·19·2003
CHKD.	H.HUANG	JUL·19·2003
APPD.	C.WANG	JUL·19·2003

DATE

MV 7/15

SPACE HEATER TERMINAL BOX DRAWING

TECO Westinghouse

DWG NO. 3A040U272 REV:03

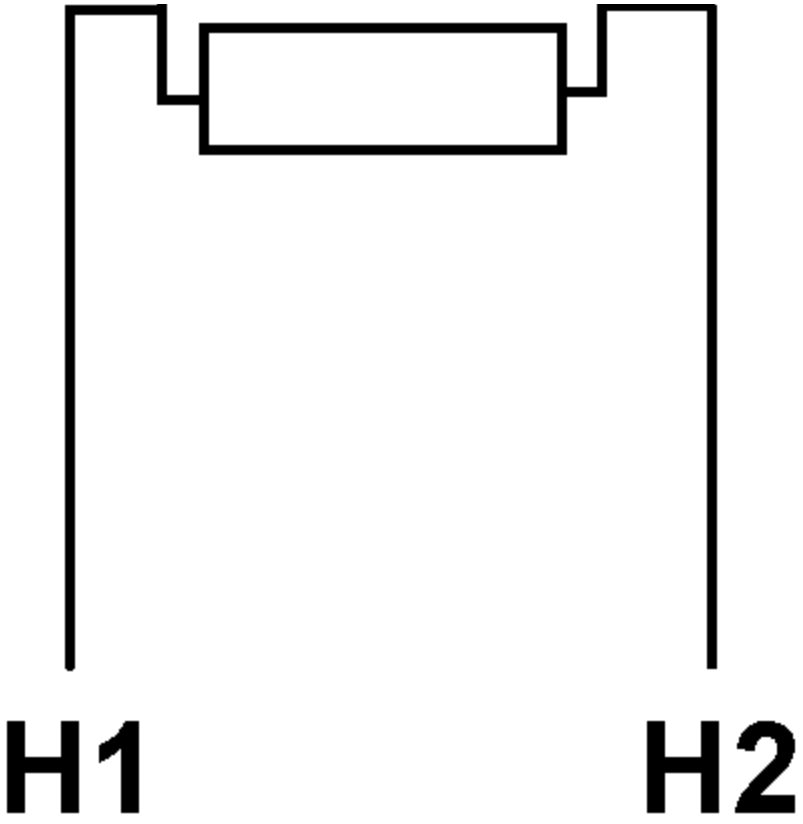

120 VOLT SINGLE PHASE POWER SOURCE

SHOULD BE DE-ENERGIZED WHEN MOTOR IS IN OPERATION

Parallel

SPACE HEATER SCHEMATIC DIAGRAM

DWG NO. REV:00

3A040D099

DATE:	CONNECTION DIAGRAM	SERIES:
April 2, 2020		**AFHP**

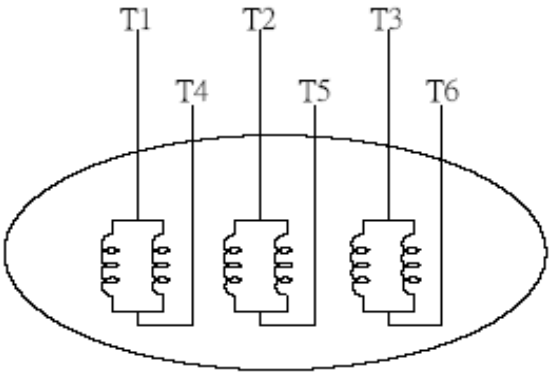

SCHEMATIC DIAGRAM - 6 LEADS

VOLTAGE	CONNECTION	ROTATION (VIEWED FROM DRIVE END)
2300	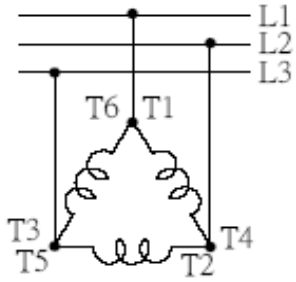	
4160	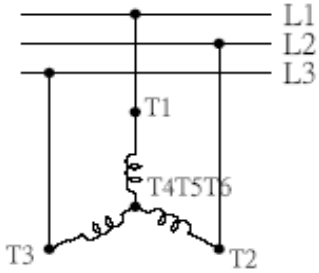	

TECO Westinghouse

DWG. NO.

3A061H475-AFHP

ISSUED APR. 24 2019	SCHEMATIC DRAWING	MODEL AFHP
REVISED	3—PHASE PREMIUM EFFICIENCY INDUCTION MOTORS FRAME NO. (EG) 5009B~5011B	

TOTALLY ENCLOSED FAN COOLED TYPE. SQUIRREL CAGE ROTOR

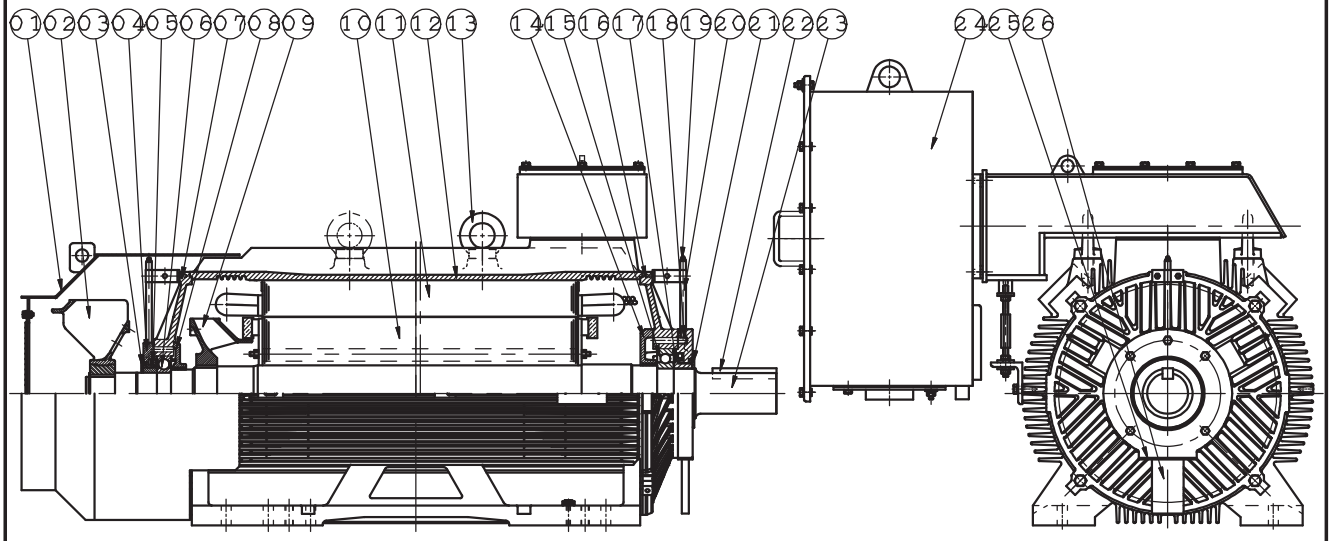

ITEM	NAME
01	FAN COVER
02	EXTERNAL FAN
03	GREASE FLINGER
04	BEARING COVER—OUTER
05	GREASE FLINGER
06	BEARING
07	END BRACKET
08	BEARING COVER—INNER
09	INNER FAN
10	ROTOR
11	STATOR
12	FRAME
13	EYE BOLT
14	BEARING COVER—INNER
15	BEARING
16	END BRACKET
17	GREASE FLINGER

ITEM	NAME
18	BEARING COVER—OUTER
19	GREASE NIPPLE
20	GREASE PIPE
21	GREASE FLINGER
22	KEY
23	SHAFT
24	TERMINAL BOX
25	GASKET
26	OIL DRAIN COVER

APPD.	C. WANG	APR. 24 2019	TECO Electric & Machinery Co., Ltd.	DWG NO. 4B049R739E
CHKD.	H. WANG	APR. 24 2019		REV.00
DWN.	L. JHENG	APR. 23 2019		1/1

OPERATION
&
MAINTENANCE
MANUAL
FOR
THREE PHASE
INDUCTION
MOTORS

TECO-Westinghouse Motor Company
5100 North IH-35
Round Rock, Tx. 78681

Frame Size 5000 and Larger

INDEX PAGE

1. INTRODUCTION 1
2. ACCEPTING, INSPECTION, STORAGE, TRANSPORTATION 2
3. INSTALLATION 4
   3.1 Site and environment for motor installation 4
   3.2 Foundation 4
   3.3 Installation of shaft coupling 6
   3.4 Installation of belt drive 9
   3.5 Conveyance with chain or gear 10
   3.6 Electrical connections 11
4. OPERATION 12
   4.1 Examination before starting 12
   4.2 Starting operation 15
5. MAINTENANCE 17
   5.1 Major points in regular inspection and maintenance 17
   5.2 Motor windings 18
   5.3 Cleaning of the interior of the motor 18
   5.4 Cleaning of the exterior of the motor 19
   5.5 Maintenance of anti-friction bearings 19
      5.5.1 Frequency of re-lubrication 19
      5.5.2 Kinds of grease 20
      5.5.3 Grease quantity 20
      5.5.4 Re-greasing 20
      5.5.5 Oil re-lubrication 22
      5.5.6 Cleaning and installation of bearings 23
   5.6 Maintenance of sleeve bearings 24
      5.6.1 Daily inspection 24
      5.6.2 Regular examination 24
      5.6.3 Disassembly 25
      5.6.4 Re-assembly 26
   5.7 Maintenance of slip rings (for Wound Rotor only) 27
   5.8 Maintenance of non-reverse ratchet mechanism (Vertical Motors only) 29
6. FAULT FINDING AND RECOGNITION 31

1. INTRODUCTION

This and the following instruction address the more common situations encountered in motor installation, operation and maintenance. For the TWMC motor warranty to be and to remain in effect, the motor must be installed and operated in strict accordance with the outline drawing, motor nameplates and these instructions and must not be altered or modified in any unauthorized manner.

During the installation and operation of motors in heavy industrial applications there is a danger of live electrical parts and rotating parts. Therefore to prevent injury and/or damage the basic planning work for installation, transportation, assembly, operation, etc... needs to be done and checked by authorized and competent personnel only.

Since these instructions cannot cover every installation, operation, and maintenance the following points should be considered and checked.

- The technical data and information on permissible use such as assembly, connection, ambient and operating conditions given in the related catalogue, operating instructions, nameplates and other production documentation.
- The general erection and safety regulations.
- The local and plant-specific specifications and requirements.
- The proper use of transport, lifting devices and tools.
- The use of personal protective equipment.

Following indications should be observed when reading these instructions.

Safety instructions are marked as follows:

Warning of electric hazards for personnel.

Warning of dangers for personnel.

ATTENTION!
Warning of damage for the motor or installation.

2. ACCEPTING, INSPECTION, STORAGE, TRANSPORTATION

2.1 Inspection upon receipt

Check the following points upon receipt:

- Are the nameplate ratings identical with what you ordered?
- Are dimensions and color in compliance with your specifications?
- Are the nameplate ratings for space heater, thermal protector, temperature detector, etc. identical with what you ordered?
- Is there any damage?
- Are all accessories and accompanying instruction manuals in good order?
- Please ensure that the arrow head indicator really indicates direction of rotation.
- If there is any specific requirements, please ensure they are in conformity with your specifications.

- Motor stator housing may be outfitted with condensation drain holes that are either open holes, drain holes with plugs or drain holes with breather drains. For horizontally mounted motors position the drain holes at the lowest point possible to allow for the egress of condensation. For vertical shaft installations the lower end bracket must be outfitted with drains at the lowest point possible. Prior to installation remove drain plugs if fitted.
-

2.2.1
Storage

When motors are not in operation, the following precautionary measures should be undertaken to assure best performance.

2.2.2
Place

(a) High and dry, well ventilated without direct sun, dust or corrosive gas.
(b) Not located near a boiler or freezer.
(c) Entirely free from vibration and easy movement.
(d) Motors should be put on pallets to prevent moisture.

2.2.3

Motors should be well-shielded form dust, but under well-ventilated circumstances.

2.2.4 Moisture prevention

Since moisture can be very detrimental to electrical components, the motor temperature should be maintained about 3°C above the dew point temperature by providing either external or internal heat. If the motor is equipped with space heaters, they should be energized at the voltage shown by the space heater nameplate attached to the motor. Incandescent light bulbs can be placed within the motor to provide heat. However, if used, they must not be allowed to come in contact with any parts of the motor because of the concentrated hot spot that could result.

2.2.5

Even during storage, the insulation resistance should be kept above the specified values.

(a) For measurement of insulation resistance and acceptable standard values, please refer to

measures stated in 4.1.2 “Measurement of insulation resistance”.

(b) Insulation resistance test should be performed once every three months.

2.2.6

If the motor is not in operation for a long period (one week and above) after installation or has been in operation but stopped for a period of time, the following precautions must be taken.

(a) Protect the motor as measures stated in 2.2.4.

(b) Insulation resistance test should be performed as stated in 2.2.5.

2.2.7 Bearing protection

(a) If the motor has been provided with a shaft shipping brace to prevent shaft movement during transit, it must be removed before operating the motor. It is very important that this brace be re-installed exactly as it was originally, before the motor is moved from storage or any time when the motor is being transported. This prevents axial rotor movement that might damage the bearings.

(b) Motors equipped with sleeve bearings are shipped from the factory with the bearing oil reservoirs drained. In storage, the oil reservoirs should be properly filled to the center of the oil level gauge with a good grade of rust inhibiting oil. This will keep the bearing journals well oiled to prevent rusting. The motor shaft should be rotated several revolutions every month ensuring the shaft does not come to rest in its original position. While the shaft is rotating, it should be pushed to both extremes of the endplay.

(c) Motors with anti-friction bearings are properly lubricated with the correct grade of grease at the factory and no further greasing is required in storage. The shaft should be rotated several revolutions every month to maintain proper distribution of the grease within the bearings. **However, re-greasing is required if a significant period has elapsed between manufacture and use, or while in storage for extended time. It is It is a good practice to always replenish and purge with fresh grease at start up.**

(d)

(e) Tilt-pad bearings are a type of sleeve bearing used in special design applications. Due to the nature of this bearing, a loose oil ring for delivering lubricant cannot be provided. Therefore, during the storage internal, oil must be periodically manually introduced into the pads and housing to prevent the occurrence of oxidation of the precision machined components.

(1) Remove the pipe plug from the bearing cap located above the tilt-bearing shell.

(2) Pour in approximately one cup of oil every month and rotate the shaft a few revolutions about every two (2) weeks.

(3) For long periods of storage, the oil that accumulates in the housing should be removed.

ATTENTION!
Care should be taken to keep parts such as fitting surfaces, key, shaft extension and axial central hole from any collision with foreign matter. Grease should also be generously applied to prevent rusting.

2.2.9 Transportation

To keep the rotating parts of motors from moving, thus preventing damage and scratching during transportation, they should be held securely with a locking device. Remove all transit clamps

before operating the motor. It is very important that this device be reinstalled exactly as it was originally, before the motor is moved from storage or any time when the motor is being transported. The vertical mounting type motors should be transported in the vertical position.

Do not use the hoisting hook/eyebolts to lift more than the motor itself. They are designed to support the motor only. Make sure the hoisting hook is correctly attached to the eyebolt(s)/lug(s) and that they are fully screwed in before hoisting. Also note such parts as fan cover, ventilation box, bracket, slip-ring, etc. may have their own hoisting lugs which can only carry their own weight. Nothing extra should be attached while hoisting.
Do not twist the steel wires and make sure the eyebolts have been firmly screwed and the sling angle is correct.

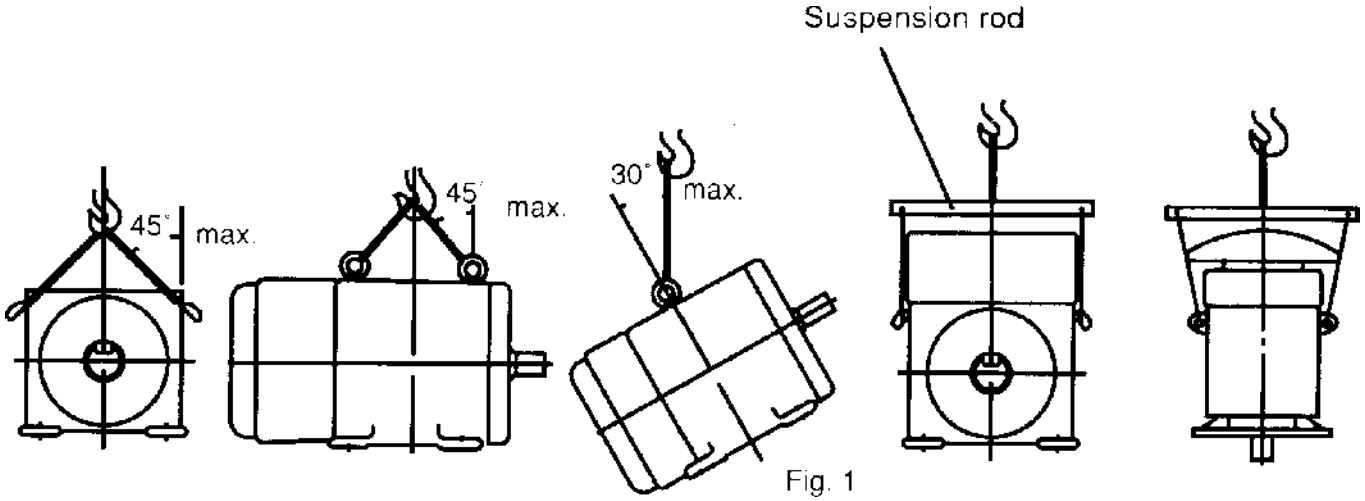

Fig. 1

3 INSTALLATION

Motor installation – site and environment

3.1.1

Standard environment and site conditions for the installation of motors are usually set as follows:

(a) Ambient temperature: -10~40°C
(b) Humidity: Relative humidity below 90%RH for totally enclosed types, and below 80%RH for semi-enclosed types.
(c) Elevation: below 1000 meters or 3300 feet.
(d) Harmful gases, liquids, dusts, high moisture should be absent.
(e) Foundations should be strong and free of vibration.

If there are any special environmental conditions, please inform TWMC prior ordering.

3.1.2 Ventilation and space

(a) Installation area should be well ventilated.
(b) The installation space should be large enough to facilitate heat dissipation and maintenance.

3.2 Foundation

3.2.1

Use rigid and solid sole plate or common bed as foundation.

For best motor performance, it is advisable to use a sole plate or common bed, particularly when using a shaft coupling.

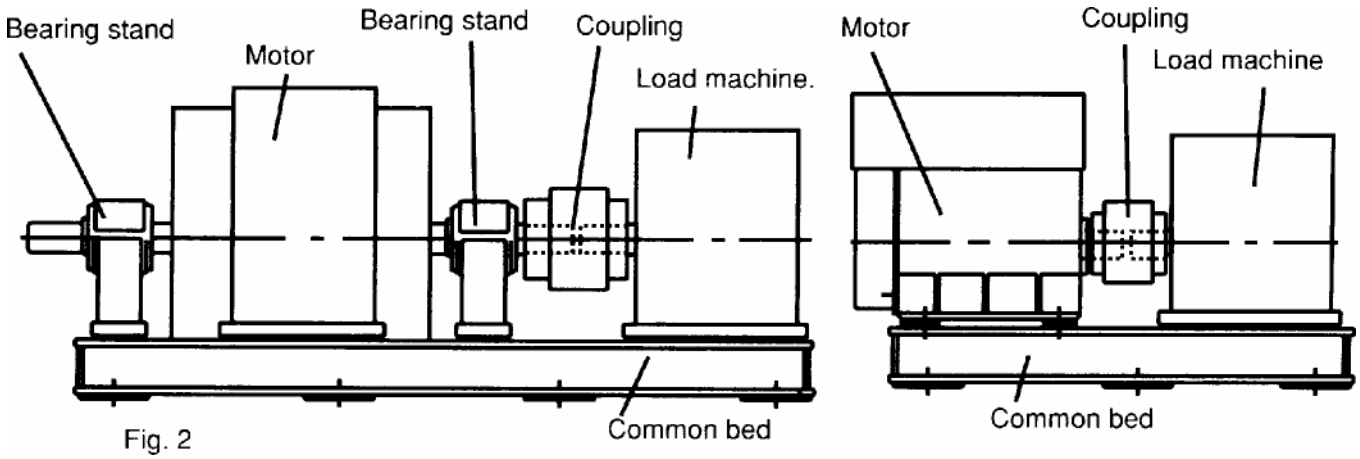

Fig. 2

3.2.2 Installation

(a) Select an appropriate foundation surface for the sole plate or common bed, which will be, considered the ultimate level.

(b) Align the position of the common bed with reference to that level.

(c) Align the level accuracy at least at four points such as bearing mounting, shaft extension etc. The accuracy should be within 0.04mm or 0.015 inches

(d) Sole plate or common bed should be embedded in concrete foundation as illustrated in Fig. 3. Stiff pads should also be installed beneath the wedges, which are welded together at various spots about 400-500mm (15.75-1 9.70 inches) apart. This will enable the foundation to evenly carry the weight of the whole motor.

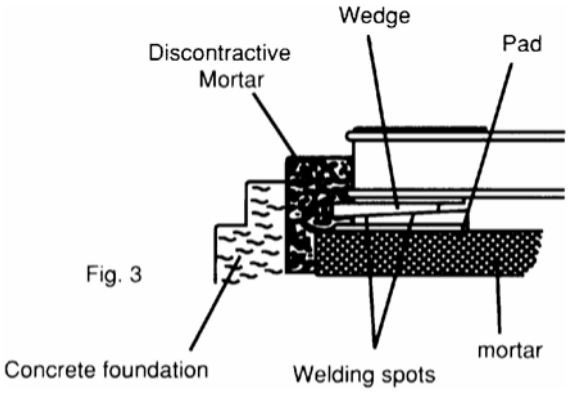

Fig. 3

(e) The base should be sturdy and rigid to keep it flat and level.

(f) Make sure the mortar and concrete are completely dry, and the precision of the level is acceptable, and then set the motor on the mounting foundation.

(g) Accurately install shaft couplings, belt sheaves etc., then weld the wedges solid to prevent any change in position.

3.2.3 The foundation of vertical induction motors: (Also the foundation of pump)

(a) Foundation of motor/pump must be rigid and secure to provide adequate support. There must be no vibration, twisting, misalignment etc. due to inadequate foundations.

(b) A massive concrete foundation is preferred in order to minimize vibration. Rigidity and

stability are enhanced by prop plate and foundation bolt. As shown in Fig. 4.

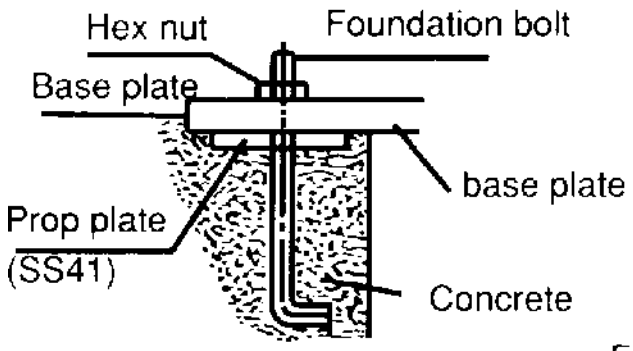

Fig. 4

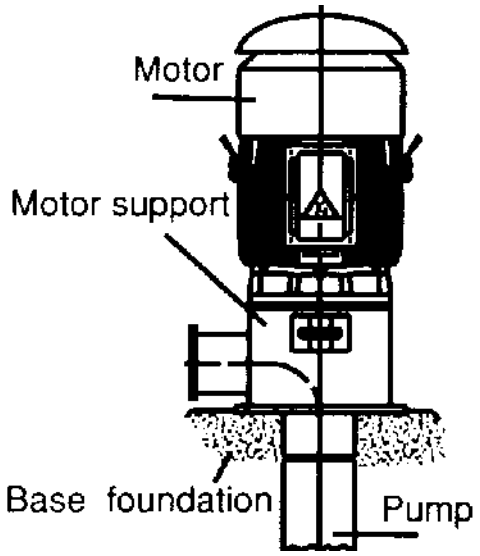

Fig. 5

3.2.4 Installation of vertical motors:

(a) All mounting surfaces must be clean and level.
(b) Foundation must be leveled at least at 4 points and guaranteed to be below 0.04mm (.0015 in.) flat and level.
(c) Make sure the mortar and concrete are completely dry, and the precision of the level is acceptable, and then set the motor on the mounting foundation.
(d) Accurately install shaft couplings.

3.3 Installation of shaft coupling

3.3.1

ATTENTION!
Motors must always be accurately aligned, and this especially applies where they are directly coupled.
Incorrect alignment can lead to bearing failure, vibration and even shaft fracture. As soon as bearing failure or vibration is detected, the alignment should be checked.

3.3.2

Field application of a coupling to the motor shaft should follow the procedures recommended by the coupling manufacturer. The motor shaft extension must not be subjected to either extreme heat or cold during coupling installation.

ATTENTION!
Basically, the coupling should be heated and pushed onto the shaft extension with slight axial force. To prevent damages to the bearing do not hammer the coupling.

3.3.4

Although the sleeve bearings are equipped with thrust faces, these are intended only to provide momentary axial restraint of rotor movement either during start-up or when operating the motor disconnected from the driven equipment. They must not be operated under a constant thrust load unless they were originally designed for this condition.

Motors with either sleeve or anti-friction bearings are suitable for connection to the driven load through a flexible coupling. Solidly coupling to the load is not acceptable. With sleeve bearings, the flexible coupling should be of the limited end float type to prevent the possibility of any end thrust from load being transmitted to the motor bearings, which could cause bearing damage. The recommended limits of end float are as follows:

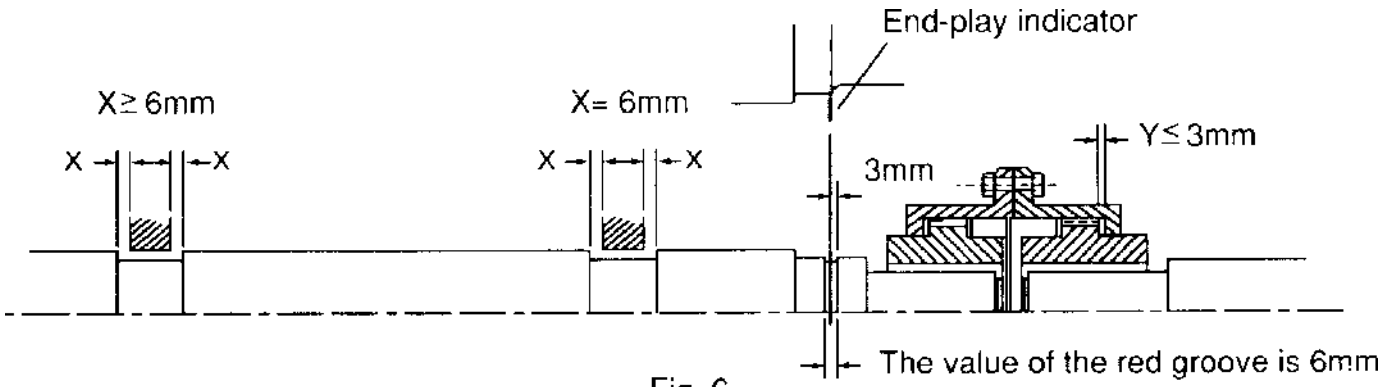

Fig. 6

(a) When the motor is in operation after installation, be sure that the end-play indicator is within the 6mm (.236 in.) of the groove on the shaft or aligned to the shaft shoulder immediately outboard of the drive-end bearing to assure there is low friction between shaft and bearing.

(b) Unless otherwise specified, the designed end-play value X of the groove for TWMC motors in general is within 6mm (.236 in.) as illustrated in Fig. 6. In essence, the endplay indicator is adjusted to point at the center of the groove or the drive-end shaft shoulder; thus X equals to 6±1 mm or so, and the endplay value (Y) of the couplings should equal or be smaller than 3mm (.118 in.).

(c) If the desired value Y is greater than 3mm (.118 in.) caused for instance by a thrust load and/or load machine with large endplay, please inform TWMC prior to entering an order.

3.3.5

In aligning the motor (and rotor) axially with the driven equipment, consideration should be given not only to the endplay indicator position but also to axial shaft expansion and increase in shaft centerline height due to thermal effects. In general, the axial shaft growth for motors can be disregarded since neither bearing is fixed and any shaft growth due to temperature increase will produce an elongation away from the coupling.

Shaft height growth (change in shaft centerline elevation) for TEFC machines can be calculated as follows:

$$\Delta = (0.0005") \times (\text{motor foot to shaft £ dimension})$$

For non-TEFC machines, divide the number by 2.

3.3.6

It is desirable, in normal operation that the motor operates on its magnetic center, so that no axial force is exerted on the coupling.

The motor shaft and the driven shaft should be aligned within the following tolerances in both angular and parallel alignment:

Unit: mm

TIR	Range of rotating speed	Solid coupling	Flexible coupling
C	2500 rpm and above	0.03	0.03
	Below 2500 rpm	0.04	0.05
A	2500 rpm and above	0.03	0.03
	Below 2500 rpm	0.03	0.04

Angular misalignment is the amount by which the centerlines of driver and driven shafts are skewed. It can be measured using a dial indicator set up as shown in Fig. 7. The couplings are rotated together through 360 degrees so that the indicator does not measure runout of the coupling hub face. The shafts should be forced against either the in or out extreme of their end float while being rotated.

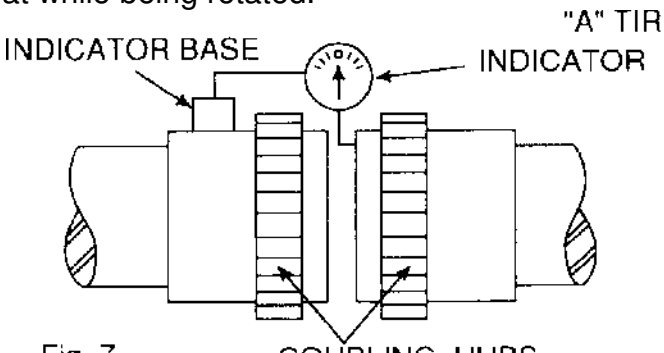

Fig. 7
TIR=Total indicator reading (by dial indicator)

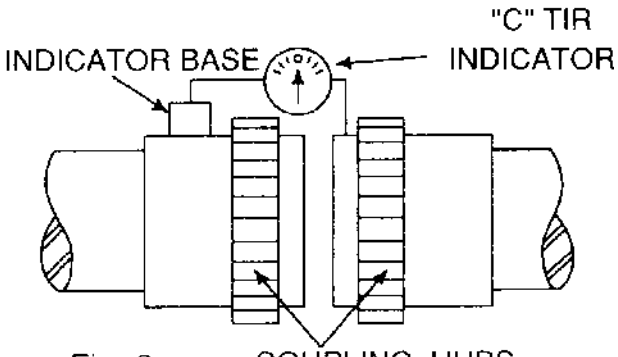

Fig. 8

Parallel misalignment is the amount by which the centerlines of the driver and driven shafts are out of parallel. It can be measured using a dial indicator set up as shown in Fig. 8. Again, the couplings are rotated together through 360 degrees so that the indicator does not measure runout of the coupling hub outside diameter.

3.3.7

After the motor has been properly aligned with the driven equipment and the hold-down bolts have been installed and tightened, for motors with fabricated frames, at least two dowel pins should be installed in two diagonally opposite motor feet.

3.3.8 Installation of shaft coupling: (Vertical hollow shaft motor only)

Bolted Coupling as shown in Fig. 9

(a) Bearings are provided to absorb some upward shaft thrust when the coupling is fitted.
(b) The coupling is fastened with bolts.
(c) This coupling type is not auto-release type.

Note: Standard high thrust motors can absorb momentary up-thrust load up to 30% of the standard down thrust load. If the up-thrust is long in duration (over 10 Seconds) and/or exceeds 30% of the standard high thrust rating, special design arrangements are required and standard motor is not suitable.

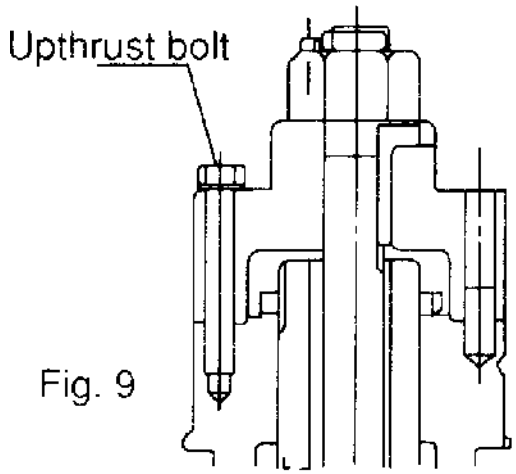

Fig. 9

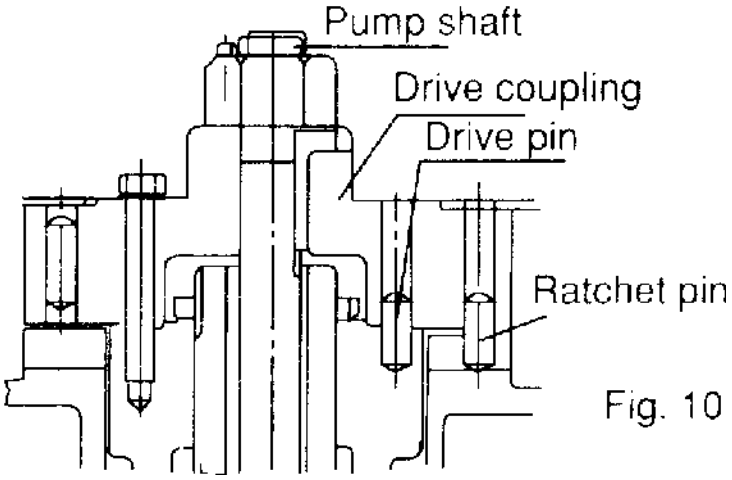

Fig. 10

3.3.9 Non-reverse ratchet/coupling, as Fig. 10 (If necessary)

The non-reverse coupling is also a bolted type and,

(a) It prevents the pump and motor from rotating in the reverse direction.
(b) It also prevents damage from over speeding and damage to pump shaft and bearings.
(c) The ratchet pins are lifted by the ratchet teeth and are held clear by centrifugal force and friction as the motor comes up to speed.
(d) When power is removed, speed decreases, and the pins fall. At the instant of reversal, a pin will catch in a ratchet tooth and prevent backward rotation.
(e) When installing the non-reverse coupling, do not use lubricant. Lubricant will interfere with proper operation. The top half of the coupling should seat solidly on the lower half and the pins should touch the bottom of the pockets between the teeth in the plate.
(f) As with the bolted coupling, the up-thrust capabilities are 30% of the standard high thrust rating for down thrust.

ATTENTION!
Do not apply non-reverse ratchets on applications in which the pump reversal time from shutdown (the instant the stop button is pressed) to zero speed is less than one second.

3.4 Installation for belt drive

In general, power transmission through direct flexible coupling is appropriate for large motors. Such motors are not suitable for belt, chain or gear connection unless specially designed for such service. However, for small and medium motors with outputs within the ranges shown on the table below, it is acceptable to use belt transmission as indicated. Beyond these ranges, do not apply belt sheaves unless specially designed.

3.4.1

The diameter ratio between conveyance sheaves should not be greater than 5 to 1 for flat belts, and 8 to 1 for V-belts. It is also advisable to limit the belt velocity to under 35m/sec (115 ft/sec) to limit belt abrasion and vibration. The smaller the outer diameter of the V-belt sheave, the greater the shaft bending stress will be. If the bending stress is in excess of the shaft fatigue stress, the shaft may break. Therefore, please inform TWMC when you have decided the size of the sheaves and the length of the belts upon ordering.

ATTENTION!
Place the sheave and belt as close as possible to the motor body (it is advisable to make x as shown in Fig. 11 equal to 0) to reduce the bending moment and improve shaft life.

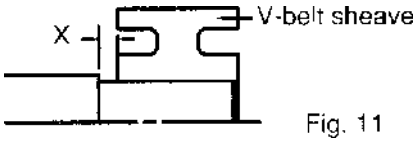

Fig. 11

3.4.2 Table of belt-sheave application for general electric motors

Output (KW/HP)			V-Belt Sheave							
			Conventional V-Belts				Narrow V-Belts			
4P	6P	8P	V-Belt Type	Number Of Belts	Min. PCD (mm)	Max Width (mm)	V-Belt Type	Number Of Belts	Min. PCD (mm)	Max Width (mm)
11/15	-	-	B	4	160	82	3V	4	125	48
-	11/15	-	B	5	170	101	3V	5	140	59
-	-	11/15	B	5	190	101	3V	6	160	69
15/20	-	-	B	5	170	101	3V	6	125	69
-	15/20	-	B	5	224	101	3V	6	160	69
-	-	15/20	C	4	224	111	5V	3	180	60
18.5/25	-	-	B	5	200	101	3V	6	140	69
-	18.5/25	-	C	4	224	111	5V	3	180	60
-	-	18.5/25	C	5	224	136	5V	4	180	78
22/30	-	-	B	5	224	101	5V	6	160	69
-	22/30	-	C	5	224	136	3V	4	180	78
-	-	22/30	C	5	250	136	5V	4	200	78
30/40	-	-	C	5	224	136	5V	4	180	78
-	30/40	-	C	5	265	136	5V	4	224	78
-	-	30/40	C	6	265	162	5V	5	224	95
37/50	-	-	C	6	224	162	5V	4	200	78
-	37/50	-	C	6	265	162	5V	4	224	78
-	-	37/50	C	7	280	187	5V	5	250	95
45/60	-	-	C	6	265	162	5V	4	224	78
-	45/60	-	C	7	280	187	5V	5	224	95
-	-	45/60	C	7	315	187	5V	6	250	113
55/75	-	-	C	7	265	187	5V	5	224	95
-	55/75	-	C	8	300	213	5V	6	250	113
-	-	55/75	D	5	355	196	5V	6	280	113
75/100	-	-	C	8	315	213	5V	6	250	113
-	75/100	-	D	6	355	233	5V	6	315	113
-	-	75/1 00	D	6	400	233	5V	6	355	113
-	90/120	-	D	6	400	233	5V	6	355	113
-	-	90/120	D	6	425	233	8V	4	355	124
-	110/150	-	D	7	400	270	8V	4	355	124
-	132/175	110/150	D	7	450	270	8V	4	400	124
-	160/200	132/1 75	D	9	450	344	8V	4	450	124

3.5 Conveyance with chain or gear

3.5.1

Make sure the loading capacity of shaft and bearings is appropriate for the size and installation position (overhung) of chain and gear. If necessary, please contact us to ensure the shaft and bearings will meet your requirements.

3.5.2
Pay close attention to ensure the parallelism of shafts.

3.5.3
The teeth of couplings should be correctly and precisely matched; the force conveyance centers should lie on the same line.

3.5.4
There should be no skip, jumping, vibration or unusual noises.

ATTENTION!
Do not hammer conveyance devices such as couplings, belt sheaves, chain wheels, gears etc. onto the shaft. Conveyance devices should be fitted and removed only by means of suitable devices. Heat shrinking may be a better alternative to avoid damaging bearings and components.

The exposed rotating parts should be covered to prevent accidents.

3.6 Electrical connections
All interconnecting wiring for controls and grounding should be in strict accordance with local requirements such as the USA National Electrical Code and UK IEE wiring regulations. Wiring of motor and control, overload protection and grounding should follow the instructions of connection diagrams attached to the motor.

3.6.1 Power
The rated conditions of operation for the motor are as shown on the nameplate. Within the limits, given below, of voltage and frequency variation from the nameplate values, the motor will continue to operate but with performance characteristics that may differ from those at rated conditions:

±10% of rated voltage
±5% of rated frequency
±10% combined voltage and frequency variation so long as frequency variation is no more than ±5% of rated.

Operating the motor at voltages and frequencies outside of the above limits can result in both unsatisfactory motor performance and damage to or failure of the motor.

3.6.2
The main lead box furnished with the motor has been sized to provide adequate space for the make-up of the connections between the motor lead cables and the incoming power cables.

The bolted joints between the motor lead and the power cables must be made and insulated in a workman-like manner following the best trade practices.

3.6.3
Either fabricated motors or fan cooled cast frame, motors are all provided with grounding pads or bolts.

The motor must be grounded by proper connection to the electrical system ground.

3.6.4

The rotation direction of the motor will be as shown by either a nameplate on the motor or the outline drawing. The required phase rotation of the incoming power for this motor rotation may also be stated. If either is unknown, the correct sequence can be determined in the following manner: While the motor is uncoupled from the load, start the motor and observe the direction of rotation. Allow the motor to achieve full speed before disconnecting it from the power source. Refer to the operation section of these instructions for information concerning initial start-up. If resulting rotation is incorrect, it can be reversed by interchanging any two (2) incoming cables.

3.6.5 Auxiliary devices

Auxiliary devices such as resistance temperature detectors, thermocouples, thermoguards, etc., will generally terminate on terminal blocks located in the auxiliary terminal box on the motor. Other devices may terminate in their own enclosures elsewhere on the motor. Such information can be obtained by referring to the outline drawing. Information regarding terminal designation and the connection of auxiliary devices can be obtained from auxiliary drawings or attached nameplates.

If the motor is provided with internal space heaters, the incoming voltage supplied to them must be exactly as shown by either a nameplate on the motor or the outline drawing for proper heater operation.

Caution must be exercised anytime contact is made with the incoming space heater circuit as space heater voltage is often automatically applied when the motor is shutdown.

4. OPERATION

4.1 Examination before start

4.1.1

When motors are installed in good manner, ensure the wiring is according to the diagram. Also, the following points should be noted:

(a) Make sure all wiring is correct.
(b) Ensure the sizes of cable wires are appropriate and all connections are well made for the currents they will carry.
(c) Ensure all connections are properly insulated for the voltage and temperature they will experience.
(d) Ensure the capacity of fuses, switches, magnetic switches and thermo relays etc. are appropriate and the contactors are in good condition.
(e) Make sure the frame and terminal box are grounded.
(f) Make sure that the starting method is correct.
(g) Make sure switches and starters are set at their right positions.
(h) Motor heaters must be switched off when the motor is running.

4.1.2 Measurement of insulation resistance

During and immediately after measuring, the terminals must not be touched as they may carry residual dangerous voltages. Furthermore, if power cables are connected, make sure that the power supplies are clearly disconnected and there are no moving parts.

(a) For rated voltage below 1000V, measured with a 500VDC megger.
(b) For rated voltage above 1 000V, measured with a 1 000VDC megger.
(c) In accordance with IEEE 43, clause 9.3, the following formula should be applied:

$$R \geq \left(\frac{\text{Rated voltage (v)}}{1000} + 1 \right) \times 10 (M\Omega)$$

(d) On a new winding, where the contaminant causing low insulation resistance is generally moisture, drying the winding through the proper application of heat will normally increase the insulation resistance to an acceptable level. The following are several accepted methods for applying heat to the winding:
(1) If the motor is equipped with space heaters, they can be energized to heat the winding.
(2) Direct current (as from a welder) can be passed through the winding. The total current should not exceed approximately 50% of rated full load current. If the motor has only three leads, two must be connected together to form one circuit through the winding. In this case, one phase will carry the fully applied current and each of the others, one-half each. If the motor has six leads (3 mains and 3 neutrals), the three phases should be connected into one series circuit.

Ensure there is adequate guarding so live parts cannot be touched.

(3) Heated air can either blown directly into the motor or into a temporary enclosure surrounding the motor. The source of heated air should preferably be electrical as opposed to fueled (such as kerosene) where a malfunction of the fuel burner could result in carbon entering the motor.

ATTENTION!
Caution must be exercised, when heating the motor with any source of heat other than self contained space heaters, to raise the winding temperature at a gradual rate to allow any entrapped moisture to vaporize and escape without rupturing the insulation. The entire heating cycle should extend over 15-20 hours.

Insulation resistance measurements can be made while the winding is being heated. However, they must be corrected to 40℃ for evaluation since the actual insulation resistance will decrease with increasing temperature. As an approximation for a new winding, the insulation resistance will approximately halve for each 10℃ increase in insulation temperature above the dew point temperature.

(e) Should the resistance fail to attain the specified value even after drying, careful examination should be undertaken to eliminate all other possible causes, if any.

4.1.3 Power Source

(a) Ensure the capacity of the power source is sufficient.
(b) Ensure the supply voltage and frequency ratings are identical to those on the nameplate.
(c) Voltage variation should be confined to within ±10% of the rated value and the phase to phase voltages should be balanced.

4.1.4 Bearing lubrication

(a) For sleeve bearing motors, the oil reservoir must be filled with oil to the correct level. On self-lubricated bearings, the standstill oil level will be at the center of the oil gauge. The proper oil is a rust and oxidation inhibited, turbine grade oil. Refer to the lubrication nameplate for the recommended viscosity.

(b) Motors, which are supplied with provision for flood lubrication, have an inlet orifice to meter the oil flow to the bearing. Refer to the outline drawing for these values. If the supply pressure does not match that stated on the outline, the orifice size must be adjusted to produce the specified flow rate. The drain adapter (also provided) has a weir plate fixed to the inside of the pipe to permit the establishment of the proper oil level. This weir plate must be located at the bottom of the pipe and must be parallel to the plane of the motor feet. To ensure optimum flow, the drain line should be vented to the atmosphere.

Oil inlet temperature: Normal below 50℃
Alarm 60℃
Trip 65℃

(c) If the motor is in storage for over three (3) months, refilling of some new oil should be undertaken before operation to prevent bearing damage due to dry friction. The oil level should be kept at the center of the oil gauge. If necessary, drain some oil after refilling.

(d) Motors that have been designed with anti-friction bearings for use with an oil mist lubrication system have been packed at the factory with a small amount of grease for short test runs. Continuous running should not be considered unless the oil mist system is installed and operating.

(e) **Grease lubricant type**

(1) The bearings have been well greased at the factory before delivery. However, regreasing is required if a significant period has elapsed between manufacture and use or in storage. It is a good practice to always replenish and purge with fresh grease at start up.

(2) Unless otherwise specified, Exxon Polyrex EM is the standard applied to TWMC motors.

ATTENTION!

Do not mix different kinds of grease.

Mixing grease with different type of thickeners may destroy its composition and physical properties. Even if the thickeners are of the same type, possible differences in the additive may cause detrimental effects.

4.1.5 Cooling water for the cooler on water-cooled motors

Make sure the quality, volume and inlet temperature of cooling water for the motors are normal before the machine is in operation.

Water: General tower water or industrial water.
Volume: Please see outline drawing
Inlet temperature: Normal below 30℃
Alarm 35℃
Trip 40℃

4.1.6

ATTENTION!
Make sure all locks, which fasten the movable parts of the motors during transportation, are dismantled and the shaft can rotate freely.

4.1.7
ATTENTION!
Ensure there are no foreign matter or tools inside the motors before starting motors.

4.1.8
Make sure the transmission system, including belts, screws, bolts, nuts and set pins are in good condition.

The keys fitted to the shaft extensions are held by plastic tape only to prevent them from falling out during transportation or handling. The shaft key shall be removed to avoid flying out, when the motor is operated prior to the couplings etc. being fitted to the shaft extension.

4.1.9
Make sure the items above are examined. Test the motor running with or without load. Record and check according to "Maintenance" at 15-minute intervals during the first three hours of operation. Then regular examinations should take place at longer intervals. If all goes well the motor can be classified as "in good order".

4.2 Starting operation

4.2.1 Starting load
Initially run the motor unloaded prior to coupling to other machines. Unless otherwise specified, a motor usually starts with light load, which is then gradually increased, proportional to the square of the speed and at last reaches 100% load at full load speed.

4.2.2 Starting
Too frequent starts can be harmful to the motors. The following restrictions should be observed:

(a) Motor can be restarted should the initial start fail. Two starts are generally permissible when the motor is cold.
(b) Motor can be started only once when it is at normal running temperature.
(c) Should additional starts be necessary beyond the conditions stated above, the following restrictions should be noted:
  (1) Let the motor cool down for 60 minutes before restarting, fully loaded.
  (2) Let the motor cool down for 30 minutes before restarting, unloaded.
  (3) Two inching starts can be regarded as one normal start.

ATTENTION!
If the motor rotor fails to start turning within one or two seconds, shut off the power supply immediately.
Investigate thoroughly and take corrective action before attempting a restart.

Possible reasons for not starting are:

(1) Too low a voltage at the motor terminals.
(2) The load is too much for the rotor to accelerate.
(3) The load is frozen up mechanically.
(4) All electrical connections have not been made.
(5) Single-phase power has been applied.
(6) Any combination of the above.

4.2.3 Rotating direction

(a) Most TWMC motors are bi-directional. However, when some special types, such as high speed 2-Pole, certain large capacity motors, those with a non-reversing ratchet etc., should rotate in one direction, please ensure the rotation is in conformity with the directional arrow-mark shown on the attached nameplate.
(b) To reverse a bi-directional motor, cut the power and wait until the motor stops. Then interchange any two of the three phases.

4.2.4 Power source, Voltage, Current

(a) Ensure the voltage and frequency of the power source are identical to the ratings shown on the nameplate.
(b) Voltage variation should be confined to within ±10% of the rating and the three phase voltages should be in full balance
(c) Ensure the motor phase currents, when without load, are within ±5% of the average values.

4.2.5

Frequency variation should be confined to within ±5% of the rating. The aggregate variation of voltage and frequency should be confined to within ±10% of the absolute value of the ratings.

4.2.5 Starting time and unusual noises

ATTENTION!
Starting time is longer for the motors with large inertia. However, if starting time is longer than usual or if there is difficulty in starting, or there is abnormal noise, do not run the motor and refer to TWMC Service representative.

4.2.6 Sleeve bearing oil rings (sleeve bearing types only)

As the oil ring is used to carry lubricant to sleeve bearings, frequently check to ensure the oil ring is in motion.

4.2.7 Bearing temperature rise

Following the initial start-up, the bearing temperatures should be closely monitored. The rate of rise in bearing temperature is more indicative of impending trouble than is the actual temperature.

ATTENTION!
If the rate of rise in temperature is excessive or if the motor exhibits excessive vibration or noise, it should be shut down immediately and a thorough investigation made as to the cause before it is operated again.

If the bearing temperature rise and motor operation appear to be normal, operation should

continue until the bearing temperature stabilizes.

Recommended limits on bearing temperature are as follows:

Sleeve Bearings	**Total measured temperature**
● By permanently installed detector	90℃
● By temporary detector on top of the bearing sleeve near the oil ring	85℃

Anti-Friction Bearings	**Total measured temperature**
● By permanently installed detector	100℃
● By temporary detector measuring the outside of the bearing housing	95℃

ATTENTION! (For sleeve bearing)

(1) It must be noted that when operating flood lubricated sleeve bearings without outside lubrication supplied, the bearing temperature must not be allowed to exceed 85℃ total temperature

(2) Under normal condition, for the self-lube bearing, the rate of temperature rise should be from 11 to 14℃ for the first ten (10) minutes after starting up and approximately 22℃ at thirty (30) minutes. The rate of bearing temperature rise is a function of the natural ventilation and operating conditions.

(3) When the rate of bearing temperature rise is less than 1℃ per half-hour, the bearing temperature is considered to be stabilized.

(4) If the total bearing temperature exceeds 95℃, the motor should be shut down immediately.

4.2.8 Noise and Vibration

ATTENTION!
Any abnormal noise or vibration should be immediately investigated and corrected. Increased vibration can be indicative of a change in balance due to mechanical failure of a rotor part, a stator winding problem or a change in motor alignment.

5. MAINTENANCE

5.1 Major points in regular inspections and maintenance.

For safety, maintenance and repairs must only be carried out by properly trained personnel.

Some testing, such as insulation resistance, usually requires the motor to be stopped and isolated from power supplie(s).

Routine inspection and maintenance are usually performed by looking, listening, smelling and simple meters.

⚠ **High temperature may arise under operating conditions on the motor surfaces, so that touching should be prevented or avoided. Keep away from moving and live parts. Unless deemed necessary, do not remove guards whilst assessing the motor.**

Timely replacement of worn parts can assure longevity and prevent breakdown.

Routine inspection and regular inspection and maintenance are important in preventing breakdown and lengthening service life.

Owing to the varied time and circumstances, motors are used, it is difficult to set the items and periods for regular inspection and maintenance. However, as a guide it is recommended to be performed periodically according to factory maintenance program. Generally, the inspection scope determined by the following factors:

(a) Ambient temperature.
(b) Starting and stopping frequency.
(c) Troublesome parts usually affecting motor functions.
(d) Easily abraded parts.
(e) The important position of motor in the operational system of a factory should be duly recognized. Therefore, its health and wellbeing should be fully protected especially when it is operating in severe conditions.

5.2 Motor windings:

(a) Measurement of insulation resistance and standards to determine quality of insulation resistance, please refer to measures stated in 3.1.2 “Measurement of insulation resistance”.
(b) Inspection of coil-ends:
  (1) Grease and dust accumulated on coils may cause insulation deterioration and poor cooling effect.
  (2) Moisture must not accumulate. Keep coils warm when motor is not in use if moisture can be seen.
  (3) Discoloring. This is mainly caused by overheating.
(c) Ensure no untoward change of wedges from original position.
(d) Ensure the binding at the coil end is in its normal position.

5.3 Clean the interior of the motor:

(a) After a motor is in operation for some time, accumulation of dust, carbon powder and grease etc., on the inside is unavoidable, and may cause damage. Regular cleaning and examination is necessary to assure top performance.
(b) Points to note during cleaning:
  (1) If using compressed air or blower:

(a) Compressed air should be free of moisture.
(b) Maintain air pressure at 4 kg/cm^2, since high pressure can cause damage to coils.

(2) Vacuum

Vacuum cleaning can be used, both before and after other methods of cleaning, to remove loose dirt and debris. It is a very effective way to remove loose surface contamination from the winding without scattering. Vacuum cleaning tools should be non-metallic to avoid any damage to thee winding insulation

(3) Wiping

Surface contamination on the winding can be removed by wiping using a soft, lint-free wiping material. If the contamination is oily, the wiping material can be moistened (not dripping wet) with a safety type petroleum solvent. In hazardous locations, a solvent such as inhibited methyl chloroform may be used, but must be used sparingly and immediately removed. While this solvent is non-flammable under ordinary conditions, it is toxic and proper health and safety precautions should be followed while using it.

ATTENTION!
Solvents of nay type should never be used on windings provided with abrasion protection.
Abrasion protection is a gray, rubber-like coating applied to the winding end-turns.

⚠ **Adequate ventilation must always be provided in any area where solvents are being used to avoid the danger of fire, explosion or health hazards. In confined areas (such as pits) each operator should be provided with an airline respirator, a hose mask or a self-contained breathing apparatus. Operators should wear goggles, aprons and suitable gloves. Solvents and their vapors should never be exposed to open flames or sparks and should always be stored in approved safety containers.**

(4) Keep core ducts completely clean. The difference in temperature rise could be around 10℃ before and after cleaning

5.4 Clean the exterior of the motor:

(a) On open ventilated motors, screens and louvers over the inlet air openings should not be allowed to accumulate any build-up of dirt, lint, etc. that could restrict free air movement.

ATTENTION!
Screens and louvers should never be cleaned or disturbed while the motor is in operation because any dislodged dirt or debris can be drawn directly into the motor.

(b) If the motor is equipped with air filters, they should be replaced (disposable type) or cleaned and reconditioned (permanent type) at a frequency that is dictated by conditions. It is better to replace or recondition filters too often than not often enough.

(c) Totally enclosed air to air cooled and totally enclosed fan cooled motors require special cleaning considerations. The external fan must be cleaned thoroughly since any dirt build-up not removed can lead to unbalance and vibration. All of the tubes of the air-to-air heat exchanger should be cleaned using a suitable tube brush having synthetic fiber bristles (not wire of any type).

5.5 Maintenance of anti-friction bearings

5.5.1 Frequency of re-lubrication:

The life of grease varies greatly as a result of types of model, revolution speed, temperature, operational conditions etc. It is, therefore, impossible to be precise about replenishment intervals. However, for normal direct coupling transmission, the periods shown as Table 1 may be used as a guide.

Remarks:

(a) The periods shown in Table 1 should be halved where bearings are used for belt drive and/or in dirty or high ambient temperature or high humidity environments.

(b) Please refer to the lubrication nameplate, if attached to the motor.

(c) For bearing numbers outside the range of Table 1, please contact TWMC

(d) If the periods referred to in Table 1 for drive-end bearing and opposite drive-end are different, for the convenience of maintenance operation, please take the shorter one the required grease replenishment period of these bearings.

5.5.1 Kinds of grease:

Exxon Polyrex EM (polyurea base grease) will be used for all models with open bearings. Please check and follow lubrication nameplate for any special grease used in bearings. Please us identical grease or its equivalents when maintaining motor.

ATTENTION!
Do not mix different kinds of grease.
Mixing grease with different type of thickeners may destroy its composition and physical properties. Even if the thickeners are of the same type, possible differences in the additive may cause detrimental effects.

5.5.2 Grease quantity

The amount of grease per replenishment depends on the type, size and construction of the bearings. The maximum amount of replenishment for each bearing is shown in Table 2.
This replenishment amount is also the amount used at the time the motor is initially started.

5.5.3 Re-greasing

⚠ **If re-lubrication is to be performed when the motor is running, stay clear of rotating parts.**

It is advisable to re-grease when the motor is running to allow the new grease to be evenly distributed inside the bearing.
Before re-greasing, the inlet fitting should be thoroughly cleaned to prevent any accumulated dirt from being carried into the bearing with the new grease. The outlet of grease drainage should be opened to allow the proper venting of old grease. Use a grease gun to pump grease through grease nipple into the bearings. After re-greasing, operate the motor for 10-30 minutes to allow any excess grease to vent out.

TABLE 1.

Bearing Number		600 RPM	720 RPM	750 RPM	900 RPM	1000 RPM	1200 RPM	1500 RPM	1800 RPM	3000 RPM	3600 RPM
62XX 63XX 72XX 73XX	10										
	12									2000 Hrs.	
	13										
	14									1000 Hrs.	
	15										
	16									720 Hrs.	
	17							2000 Hrs.			
	18			3000 Hrs.							
	20										
	22										
	24							1500 Hrs.			
	26										
	28					2000 Hrs.		1000 Hrs.			
	30										
	32							500 Hrs.			
	34					1500 Hrs.					
	36										
	38			2000 Hrs.		1000 Hrs.					

Bearing Number		600 RPM	720 RPM	750 RPM	900 RPM	1000 RPM	1200 RPM	1500 RPM	1800 RPM
NU2XX NU3XX	NU214								
	15							2000 Hrs.	
	16								
	17								
	18			3000 Hrs.				1500 Hrs.	
	20								
	22							1000 Hrs.	
	24								
	26					2000 Hrs.			
	28							500 Hrs.	
	30								
	32								
	34			2000 Hrs.		1000 Hrs.			
	36								
	38	2000 Hrs.							
	40								
	44			1000 Hrs.					
	48	1000 Hrs.							

Bearing Number		600 RPM	720 RPM	750 RPM	900 RPM	1000 RPM	1200 RPM	1500 RPM	1800 RPM
	22220							300 Hrs.	
	22								
	24	1000 Hrs.				500 Hrs.			
	26								
	28								
222XX 223XX	30					300 Hrs.			
	32			500 Hrs.					
	34								
	36								
	38	500 Hrs.							
	40			300 Hrs.					
	44								
	48	300 Hrs.							

TABLE 2.

Bearing No.		Amount of replenishment
62XX 72XX NU2XX 222XX	6210	30 g
	6212	40
	6213	50
	6214	50
	6215	60
	6216	60
	6217	80
	6218	80
	6220	100
	6222	120
	6224	120
	6226	140
	6228	160
	6230	180
	6232	200
	6234	250
	6236	300
	6238	350
	6240	400
	6244	450
	6248	500

Bearing No.		Amount of replenishment
63XX 73XX NU223XX 223XX	6310	40 g
	6312	60
	6313	80
	6314	80
	6315	100
	6316	100
	6317	120
	6318	120
	6320	160
	6322	220
	6324	270
	6326	300
	6328	400
	6330	450
	6332	500
	6334	600
	6336	700
	6338	800
	6340	900
	6344	900
	6348	900

***Fill new grease until it overflows** and the old grease is entirely replaced.

5.5.4 Oil re-lubrication (For oil lubrication types only)

Maintain proper lubrication by checking the oil level periodically and adding oil when necessary. Because of the initial clearing action of the bearing and the expansion of the oil as it comes up to operating temperature, the oil level will be higher after the motor has been in operation for a while than it is with the motor at standstill.

Overfilling should be avoided not only because of the possibility that expansion may force the oil over the oil sleeve and on to the rotor, but also because too high an operating oil level prevents the bearing form clearing itself of excess oil. The resultant churning can cause extra loss, high temperatures, and oxidized oil. If, during operation, the oil level goes above the maximum shown on the sight gauge, drain enough oil to bring the level back within the recommended operating range. **Do not permit the operating level to fall below the minimum shown on the gauge.**

ATTENTION!
Should it ever become necessary to add excessive amount of make-up oil, investigate immediately for oil leaks.

Change the oil at regular intervals. The time between oil changes depends upon the severity of operating conditions and, hence, must be determined by the motor user. Two or three changes a year is typical, but special conditions, such as high ambient temperature, may require more frequent changes. Avoid operating the motor with oxidized oil.

Use only good grade, oxidation-corrosion-inhibited turbine oils produced by reputable oil companies.

The viscosity of the oil to be used depends upon the type and size of the bearings, its load and speed, the ambient temperature, and the amount and temperature of the cooling water (if used)). The lubrication nameplate or instructions with each motor specifies the viscosity range of oil suitable for average conditions. The usual oil viscosity range of oil suitable for average conditions. The usual oil viscosity recommendations are summarized in Table 3. Operation in ambient temperatures that are near or below freezing may require preheating the oil or the use of special oil. Whenever the motor is disassembled for general cleaning and reconditioning, the bearing housing may be washed out with a suitable cleaning solvent. Be sure that the oil-metering hole is clear, and then dry the housing thoroughly before re-assembly, and ensure all traces of cleaning solvent have been removed.

TABLE 3 Oil Viscosity**

Bearing function and location	Bearing Type	Oil Viscosity - SSU	
		@ 100℉	@ 200℉
Thrust Bearing	72XX, 73XX Angular contact ball And/or (62XX, 63XX)	150	45
	Spherical roller	300	53
	Plate (Kingsbury Type)	300	53

**Remark: When a lubrication nameplate attached to the motor, use lubrication oil it stipulates.

5.5.5 Cleaning and installation of bearings

(a) Apply the proper amount of grease to the disassembled parts of the bearing after they have been thoroughly cleaned with high quality cleaning oil. Then protect them from contamination before and during assembly.

(b) Bearing installation

ATTENTION!
Before installing the bearings, make sure that the shaft-mounted parts inside the bearings are in place before installation.

Since the bearing is a high precision component, it is important to avoid ingression of dust and foreign matter, and hammering during cleaning and installation. Use extreme care and insure clean conditions during installation and assembly.

ATTENTION!
The best way for bearing installation is heat shrinking. Knocking and hammering during installation should be avoided absolutely.

The bearing should be heated in a bath of clean oil at a temperature of approximately 80℃. After warming, slide the bearings in place quickly and nimbly so that it has not shrunk before being fully in position.
Grease the bearing after the temperature returns to normal, and then reassemble the motor.

5.6 Maintenance of sleeve bearings

5.6.1 Daily inspections

(a) Ensure the volume and quality of lubrication oil is in compliance with specifications.

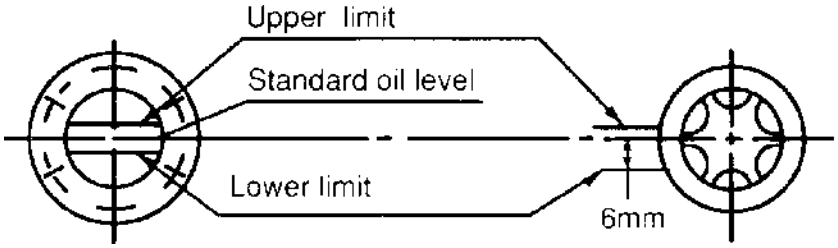

Fig. 12

(b) Ensure there is motion of the oil ring and it is not clamped.

(c) The indicator of the shaft endplay should be restricted within the specified range of the red groove of the shaft or the ±3mm (.118 in.) range of the drive-end shaft shoulder, or the bearing may be damaged.

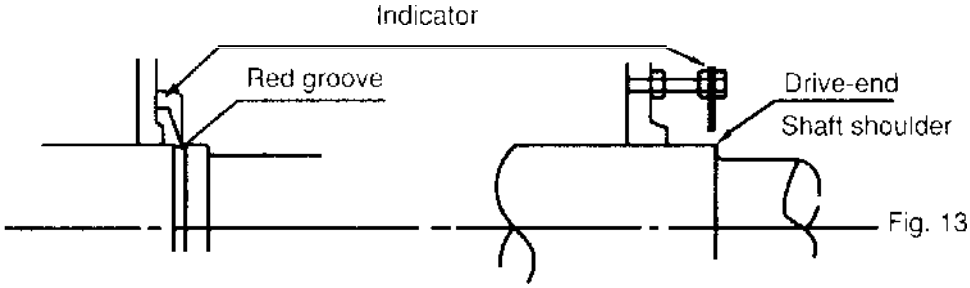

Fig. 13

5.6.2 Regular examination

(a) Periodical change of oil reservoirs

The oil flood) of self (not bearings lubricated should be drained and refilled about every six- (6) months. More frequent changes may be needed on high-speed (3600-rpm) motors or if severe oil discoloration or contamination occurs. In conditions where contamination does occur, it may be advisable to flush the reservoir with kerosene to remove any sediment before new oil is added. Proper care must be taken to thoroughly drain the reservoir of the flushing material before refilling with the new oil.

Refill the reservoir to the center of oil sight glass with a turbine grade of oil that is rust and oxidation inhibited. Refer to the outline and lubrication nameplate for the correct viscosity.

(b) Quantity of lubrication oil

Please refer to the lubrication nameplate for oil quantity.

(c) Oil viscosity

(d)

ISO	Equivalents	Viscosity (SUS/100℉)
VG32	Esso Teresso 32	150
VG46	Esso Teresso 46	200
VG68	Esso Teresso 68	300

5.6.3 Disassembly

Prior to disassembling, ensure the power supplies are disconnected and there are no moving parts.

The bearing sleeve is of the spherically seated, self-aligning type. The opposite drive end bearing is normally insulated for larger motors (or when specified). On some motors, the insulation is bonded to the spherical seat of the bearing housing.

ATTENTION!
Extreme care must be exercised in removing the bearing sleeve from the insulated support to avoid damaging this insulation.

The following is the recommended procedure for removing the bearing sleeve:

(a) Remove the oil drain plug in the housing bottom and drain the oil sump.

(b) Remove all instrumentation sensors that are in contact with the bearing sleeve. These would include resistance temperature detectors, thermocouples, thermometers, etc.

(c) Remove the socket head bolts holding the bearing cap and the inner air seal. The end cover plate must also be removed if the non-drive end bearing is being disassembled. Remove the bearing cap and top half of the inner air seal. Place them on a clean, dry surface to avoid damage to the parting surfaces.

(d) Remove the top half of the bearing sleeve using suitable eyebolts in the tapped holes provided. Lift the bearing top straight up and avoid any contact with the shoulders of the shaft journals that might damage the thrust faces of the bearing. Place on a clean, dry surface taking care to prevent damage to either the parting surfaces or the locating pins that are captive n the top bearing half.

(e) Remove the screws at the partings in the oil ring and dismantle the ring by gently tapping the dowel pin ends with a soft face mallet. Remove the ring halves and immediately reassemble them to avoid any mix up I parts or damage to the surfaces at the partings.

(f) Pull up on the garter spring that surrounds the floating labyrinth seal and carefully slip out the top half. Rotate the garter spring until the lock is visible. Twist counter-clockwise to disengage the lock, remove the garter spring then rotate the lower half of the seal out of the groove in the bearing housing. Note the condition of these floating labyrinth seals. If they are cracked or chipped, they must be replaced. Do not attempt to reuse a damaged seal.

(g) To remove the bottom bearing half, the shaft must be raised a slight amount to relieve pressure on the bearing. On the drive end, jacking or lifting the shaft extension will relieve the pressure on the bearing for removal. Protect the shaft. On the non-drive, jacking or lifting can be done using bolts threaded into the tapped holes provided in the shaft end.

(h) Roll the bottom bearing half to the top of the shaft journal and then lift it using suitable eyebolts threaded into the holes provided. Again avoid any contact with the shaft shoulders that could damage the bearing thrust faces. Place the lower bearing half on a clean, dry surface to protect the parting surfaces.

Use extreme care when rolling out the lower bearing half. Keep the hands and fingers well clear of any position where they might be caught by the bearing half if it were accidentally released and rotated back to its bottom position. Serious personal injury could result.

(i) Protect the shaft journal by wrapping it with clean, heavy paper or cardboard.

5.6.4 Re-assembly

Bearing re-assembly is basically a reverse of the disassembly procedures outlined above, with the following suggestions:

(a) The interior of the bearing housing should be cleaned and then flushed with clean oil or kerosene.

(b) The bearing halves and the shaft journal should be wiped clean using lint-free cloth soaked with clean oil.

(c) All parts should be carefully inspected for nicks, scratches, etc., in any contract surfaces. Such imperfections should be removed by an appropriate method such as stoning, scraping, filling, etc., followed by thorough cleaning.

(d) Before installing the floating labyrinth seal halves, observe their condition. Do not attempt to use a cracked or chipped seal. The bottom half seal has a set of drilled holes in its side face. These must be place at the bottom toward the inside of the bearing so that accumulating oil may drain back into the housing.

(e) Put a bead of Curil-T around the seal half outside diameter on both sides adjacent to the garter spring groove. This will prevent oil by-passing the seal around its outside.

(f) Place the bottom seal half on top of the shaft and roll it into position. Install the top half and insert the garter spring pulling up on both ends to permit engaging the lock. Run a bead of Curil-T around the outside diameter on both sides adjacent to the garter spring groove on this half also.

(g) Carefully reassemble the two oil ring halves. Inspect the dowel pins for burrs and straightness and make any corrections required. Do not force the ring halves together. Excessive force may alter the roundness or flatness of the oil ring, which can change its oil delivery performance.

(h) Some of the pipe plugs in the housing are metric thread type. These are identified as those, which have a copper, lead, or similar material washer. If these plugs are removed,

be careful not to lose the washers. Before re-assembly, inspect the washers and replace them as required.

(i) Before installing the bearing cap, observe the position of the floating labyrinth seal. The "tab" must be on top to engage the pocket. Failure to position the seal properly will result in damage when the cap is assembled.

ATTENTION!
(1) Curil-T is the only approved compound for use in the assembly of the bearings on this motor. Other products may harden and impede the operation.
(2) During the re-assembly of the bearing parts, a thin layer of Curil-T should be applied to all gaskets and machined interface surfaces. This suggestion does not apply to the machined surfaces of the bearing liner halves.
(3) When seating the bearing shell, apply a thin layer of lube oil at the spherical surface of the liner. Slowly roll the lower bearing liner into the bearing housing making sure that the splinted surface of the liner and the housing are flush. Gradually lower the shaft onto the bearing. The weight of he shaft will help rotate the bearing liner so that the babbitt surface of the liner will match the slope of the journal. Sometimes it is required to use a rubber mallet to tap lightly on the bearing housing while slowly rolling the shaft to help this seating operation.

5.7 Maintenance of slip ring (For Wound Rotor Motors only)

Ensure motor is disconnected from power supplies and there are no accessible moving parts before maintenance operation.

5.7.1 Adjustment of carbon brush

(a) Brush pressure for normal operation:
- Electro-graphite brush... 0.2~0.25 kg/cm^2
  When frequent vibrations are evident or the brush is small (area below 0.5 cm^2), the pressure should be greater than as shown.

(b) Adjustment of brush pressure:
The brush pressure should be adjusted to keep normal operation as it wears.
- The brush pressure may be reduced after use, so it is necessary to re-adjust. For adjustment, please turn adjusting screw, pressure adjusting pin or pressure adjusting plate as shown in Fig. 14 to obtain the correct tension (=0.23 x brush cross sectional area in cm^2) ±10% kg.

(c) Brush pressure need not be adjusted if constant force spring is used as shown in Fig. 15 and Fig. 16.

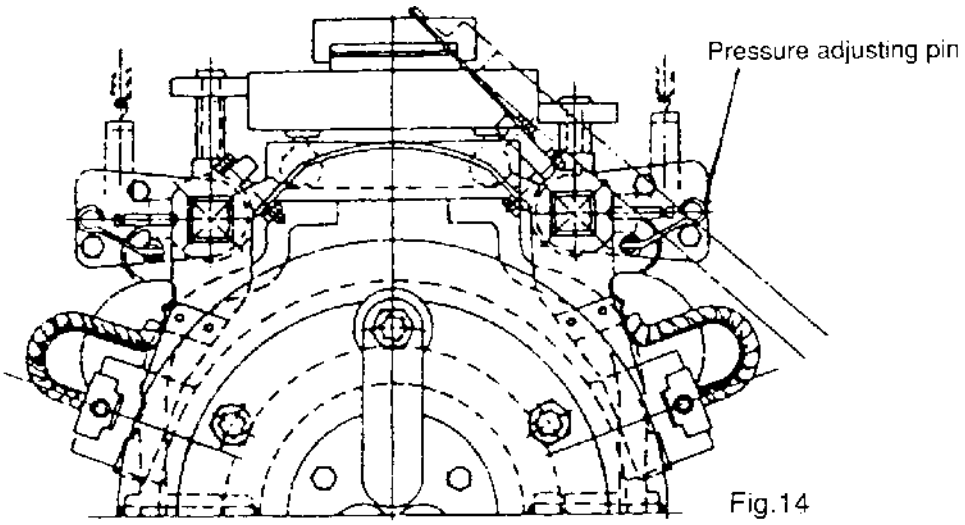

Fig.14

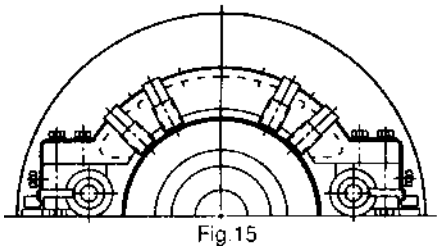

Fig.15

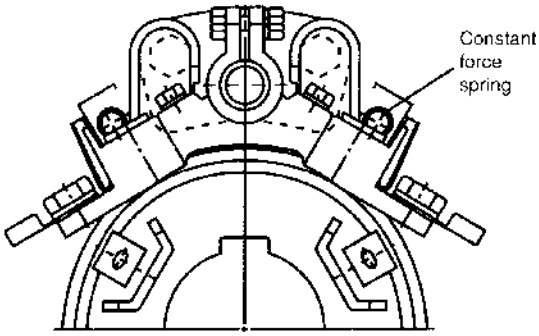

Fig.16

5.7.2 Brush replacement

The carbon brush is a part of the equipment which is easily worn away, replace it after it is worn to V ~ 3/4 of original size.

(a) Brush material

The brush material is important to the performance of the motor. Only the most appropriate materials are chosen by TWMC, and are listed on the nameplate of the motor. It is important to know this when you replace the brush, so a recommended type is used.

(b) Dimensions

Brush, holder and gap between them, please refer to CNS 2322 C4051 or JIS C2802.

ATTENTION!
The gap between a brush and it holder is important for good performance and safety of the motor.

(c) Adjustment of new brushes (Shown in Fig. 17)

(1) Polish the new brush with a file until is assumes the appropriate contour of the slip ring that it touches.

(2) Place sandpaper (JIS R6252 No. 40... 50) on the slip ring with the abrasive face of the paper against the brush to induce a closer contact by rubbing against each other.
(3) Repeat item 2 with fine sand –paper (JIS R6252 No. 100 to 200) until the contact surface between brush and slip ring exceeds 80%.
(4) Finally, clean the contaminated slip ring and brush with clean cloth or compressed air.

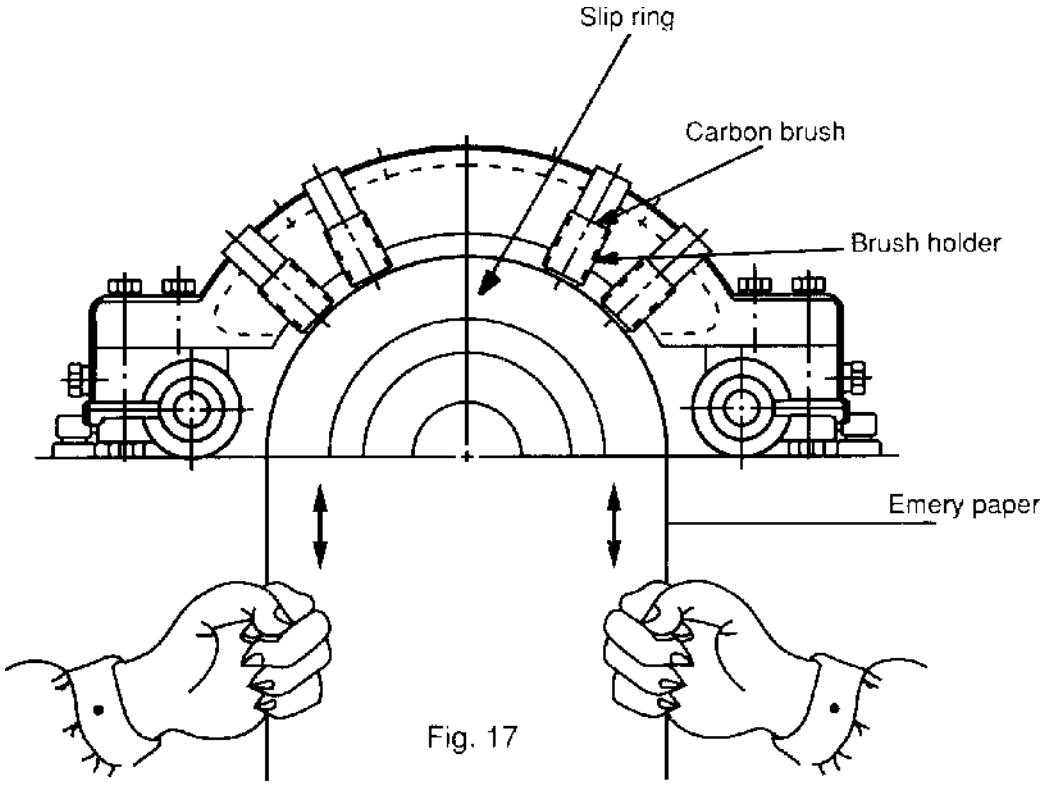

Fig. 17

5.8 Maintenance of non-reverse ratchet mechanism
(For Vertical high Thrust motor only)

5.8.1
In the pump piping system, a check valve and a stop valve should be installed in the discharge line. The check valve, placed between the pump and the stop valve, is to protect the pump from reverse flow and excessive pressure. The stop valve is used in priming, starting and when shutting down the pump. It is advisable to close the stop valve before stopping the pump. This is especially important when the pump is operated against a high static head.

TWMC vertical high thrust motors are equipped with non-reverse ratchet (N.R.R.) mechanism only when requested by the pump manufacturer. Typical construction of the N.R.R. mechanism is shown as Fig 18 below.

The N.R.R. mechanism keeps the pump and motor from rotating in the reverse direction. Thus prevents damage from over-speeding and damage to water-lubricated pump shaft bearings.

When, on shutdown, the falling water column tends to drive the pump in the reverse direction. In normal operation, the ratchet pins are lifted by the ratchet teeth and are held clear by centrifugal force and friction as the motor comes up to speed. When power is removed, the speed decreases and the pins fall. At the instant of reversal, a pin will catch in a ratchet tooth and prevent backward rotation.

5.8.2
The service life of ratchet pins depends not only on the reverse shock load between the pin and ratchet tooth when pump stopped but also the frequency of pump starting and stopping while in service. Provided that the pins are deformed due to this reverse shock load, then the up and down motion of the ratchet pins could be sluggish or jammed and unusual noises shall arise.

The recommended replacement period for these ratchet pins is every three- (3) years. If the reverse shock load is greater than 30% of motor rated torque or the starting frequency is more than twice per day, then the replacement period should be halved.

ATTENTION!
The check valve and stop valve in the discharge line should be regularly inspected and maintained to assure the normal function of these valves. This is important to protect the pump and motor from damage and increase the service life of the N.R.R. mechanism.

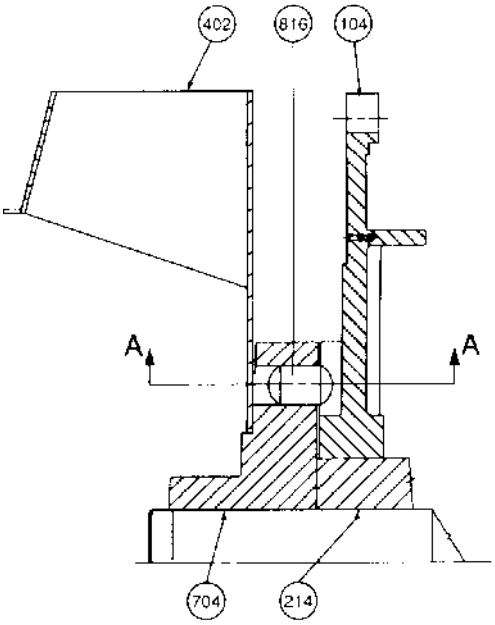

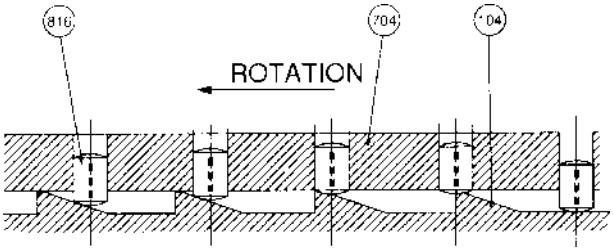

SECTION A-A

ITEM	NAME
104	RATCHET
214	BEARING SEAT
402	EXTERNAL FAN
704	RATCHET PIN CARRIER
816	RATCHET PIN

Fig. 18

6. FAULT FINDING AND RECOGNITION

Kinds of Breakdown	Symptoms	Possible Causes	Remedies
Fail to start without load	Motionless and soundless	Power-off	Consult power company
		Switch-off	Switch-on
		No fuse	Install fuse
		Broken wiring	Check wiring and repair
		Broken lead	Check wiring and repair
		Broken windings	Check windings and repair
	Fuse blowing. (Automatic switch trips off, slow start with electromagnetic noise)	Short circuit of circuit switches	Check circuit switches and replace
		Incorrect wiring	Check wiring according to nameplate
		Poor contact at terminal	Lock tightly
		Windings grounded	Factory repair
		Broken windings	Factory repair
		Poor contact of circuit switches	Check and repair
		Broken wiring	Check and repair
		Poor contact of starting switches	Check and repair
		Short circuit of starting switches	Check and repair
		Incorrect connections of starting switches	Connect according to nameplate
Loading after start	Fuse blowing. Fail to restart due to trip-off of automatic switch	Insufficient capacity of fuse	Replace fuse if wiring permits
		Overload	Lighten load
		High load at low voltage	Check circuit capacity and reduce load
	Overheating motor	Overload or intermittent overload	Lighten load
		Under-voltage	Check circuit capacity and power source
		Over-voltage	Check power source
		Ventilation duct clogged	Remove the foreign matter in the duct
		Ambient temperature exceeds 104°F (40°C)	Correct insulation class to B or F, or lower ambient temperature
		Friction between rotor and stator	Factory repair
		Fuse blown (Single-phase rotating)	Install the specified fuse
		Poor contact of circuit switches	Check and repair
		Poor contact of circuit starting switches	Check and repair
		Unbalanced three-phase voltage	Check circuit or consult power company

Kinds of Breakdown	Symptoms	Possible Causes	Remedies
Loading after start	Speed falls sharply	Voltage drop	Check circuit and power source
		Sudden overload	Check machine
		Single-phase rotating	Check circuit and repair
	Switch overheat	Insufficient capacity of switch	Replace switch
		High load	Lighten load
	Bearing over-heating	High belt tension	Adjust belt tension
		Slack belt tension	Adjust belt tension
		Misalignment between motor and machine shafts	Re-align
		Over speed of bearing outer-ring	Adjust bracket
		High bearing noise	Replace the damaged bearing
Noise	Electromagnetic noise induced by electricity	Occurrence from its first operation	May be normal
		Sudden sharp noise and smoking	Short circuit of windings should be repaired at the factory
	Bearing noise	Noise of low shishi or Thru-Thru	May be normal
		Kala-Kala as a result of poor lubrication	Grease
		Kulo-Kulo as a result of poor lubrication	Clean bearing and grease
		Sa-Sa or larger noise	Replace the damaged bearing
	Mechanical noise caused by machinery	Loose belt sheave	Adjust key and lock the screw
		Loose coupling or skip	Adjust the position of couplings, lock key and screw
		Loose screw on fan cover	Lock fan cover screw tightly
		Fan rubbing	Adjust fan position
		Rubbing as a result of ingress of foreign matter	Clean motor interior and ventilation ducts
		Wind noise	Noise induced by air flowing through ventilation ducts
		Induced by conveyance machine	Repair machine
Vibration	Electromagnetic vibration	Short circuit of winding	Factory repair
		Open circuit of rotor	Factory repair
	Mechanical vibration	Unbalanced rotor	Factory repair
		Unbalanced fan	Factory repair
		Broken fan blade	Replace fan
		Unsymmetric centers between belt sheaves	Align central points
		Central points of couplings do not lie on the same level	Adjust the central points of couplings to the same level
		Improper mounting installation	Lock the mounting screws
		Motor mounting bed is not strong enough	Reinforce mounting bed

Remarks:

(1) Circuit switches: These include knife switches, electromagnetic switches, fuses and other connection switches etc.

(2) Starting switches: These include Delta-Star starters, compensate starters, reactance starters, resistor starters, starting controller's etc.